INSTALLATION, SERVICE AND MAINTENANCE INSTRUCTIONS

Electric part-turn actuators SP 0.1, SPR 0.1

REGADA®

74 0803 03

TEST CERTIFICATE

ELECTRIC PART-TURN ACTUATOR SP 0.1, SPR 0.1

Type number 331..... Power supply ..... V ..... Hz

Serial number ..... Max. load torque ..... Nm

Production year ..... Operating time ..... s/90°

Wiring diagram ..... Operating angle ..... °

..... Transmitter .....

Warranty period ..... months Input operating signal .....

Serial number of electric motor .....

Serial number of transmitter .....

Serial number of position controller .....

Tests made in accordance with TP 74 0687 00

Tests made by ..... Packed by .....

Date ..... Signature and stamp .....

COMPLETENESS CERTIFICATE

Used valve .....

Assembled by: Firm .....

Name.....

Warranty period ..... months

Date ..... Signature and stamp.....

INSTALLATION CERTIFICATE

Location .....

Installed by: Firm .....

Name .....

Warranty period..... months

Date ..... Signature and stamp.....

Please read these instructions carefully before mounting and operating the actuator!

Contents

1. General data ... 2
1.1 Purpose and applications ... 2
1.2 Safety instructions ... 2
1.3 Data specified on electric actuator ... 3
1.4 Warranty conditions ... 3
1.5 Under-guarantee and after-guarantee service ... 3
1.5.1 Life of actuators ... 4
1.6 Operation conditions ... 4
1.6.1 Product location, operation position and use of stop ends ... 4
1.6.2 Operation Environment ... 4
1.6.3 Power supply and duty cycle ... 5
1.7 Descriptions and function ... 6
1.8 Basic specifications ... 7
1.8.1 Basic EA specifications ... 7
1.8.2 Mechanical connection ... 10
1.8.3 Electric connection ... 10
1.9 Conservation, packing, transport, storing and unpacking ... 10
1.10 Assessment of the product and packaging and removal of contamination ... 11
2. Installation and dismantling of actuator ... 12
2.1 Installation ... 12
2.1.1 Mechanical connection ... 12
2.1.2 Electric connection and checking of function ... 13
2.2 Dismantling ... 14
3. Adjusting of actuator ... 14
3.1 Output position changes ... 14
3.2 Adjustment of position switches (version without position transmitter) (Fig.3) ... 15
3.3 Adjustment of resistant transmitter ... 15
3.4 Adjustment of the Electronic Position Transmitter (EPV) - the Resistive Transmitter (Potentiometer) with the Converter PTK 1 ... 16
3.4.1 EPV – the 2-wire version (Fig. 4) ... 16
3.4.2 EPV – 3-wire version (Fig. 5) ... 17
3.5 Adjustment of Capacitive Transmitter CPT1/A ... 17
3.6 Adjustment of pointer ... 18
3.7 Adjustment of position controller (Fig. 8) ... 19
3.7.1 Setting of controller ... 19
3.7.2 Watching operation and error states ... 20
3.8 Adjusting of stop ends ... 21
4. Service, maintenance and troubleshooting ... 21
4.1 Service ... 21
4.2 Maintenance - extent and periodicity ... 22
4.3 Troubleshooting ... 23
5. Spare parts ... 23
6. Enclosures ... 24
6.1 Wiring diagrams ... 24
6.2 Dimensional drawings ... 27

Edition: 02-2016

The right of changes reserved!

Nr.: 74 0803 03

The Installation, Service and Maintenance Instructions are drawn up according to requirements of EC Executive Nr. 2006/42/EC "Uniform requirements for machines and devices from the point of view of safety and health care", to save life and health of users and to avoid material damages and exposure environment to danger.

1. General data

1.1 Purpose and applications

Electric part-turn actuators (hereinafter **EA**) of **SP 0.1** (hereinafter **SP**) or **SPR 0.1** (hereinafter **SPR**) types are high-powered electric-mechanical products designed for direct installations onto controlled devices (regulating bodies -valves, etc.). EA of SP types are provided for remote control of closing bodies, and EA of SPR types for automotive control of regulating bodies in both directions of their movement. They can be equipped with means of measuring and control of technological processes where an unified analogue direct current or voltage signal is an information bearer on their input and/or output. They can be used in heating, energy, gas, air-conditioning and other technological systems, which they are suitable for, regarding their features. They are connected with controlled devices with a flange according to ISO 5211 and a coupling or using a stand and a coupling/a lever.

Notes:

1. *With EA having a built-in controller, in end position it is impossible to expect that the tight closing will be achieved by means of control signals.*
2. *It is forbidden to use EA as a lifting mechanism!*
3. *Switching of actuator by a semiconductor components/switches have to be consulted with producer.*

1.2 Safety instructions

EA of SP and SPR types are reserved technical devices with higher rate of danger, with possibility of installation in areas specially danger regarding casualties caused by electric current.

Electric actuators are according to directive LVD 2006/95/EC and standard IEC 61010-1:2010 assigned for installation category II (overvoltage category).

Product influence to environment

Electromagnetic compatibility (EMC): the product complies with the requirements of the Directive 2004/108/EC of the European Parliament and of the Council on the approximation of the laws the Member States relating to the electromagnetic compatibility and with the requirements of standards as well EN 61000-6-4:2007+A1:2011, EN 61000-6-2:2005, EN 61000-3-2:2014 and EN 61000-3-3:2013.

Vibrations caused by the product: product influence is negligible.

Noise produced by the product: The maximum allowable noice level (A) of the product measured in a place of operation is 62 dB (A).

Requirements for professional qualification of people performing installation, service and maintenance

Electric connection *can be performed only by an acquainted person, i.e. an* ***electrical engineer*** *with professional education of electrical engineering at an apprentice school or a technical school (secondary, complete secondary or university education) and whose qualification was verified by an educational facility authorised to verify professional qualification.*

Instructions for operating stuff training

Operation can be performed by skilled personel only trained by production plant, resp. by contracting service center!

Warning for safety use

Product protection

EA **SP and SPR** does not have own short-circuit protection, therefore there must be included suitable protective device into the supply power (circuit breaker, or fuse), which serves at the same time as main switch.

Type of equipment from a connection point of view: The equipment is designed for permanent connection.

1.3 Data specified on electric actuator

Nameplate:

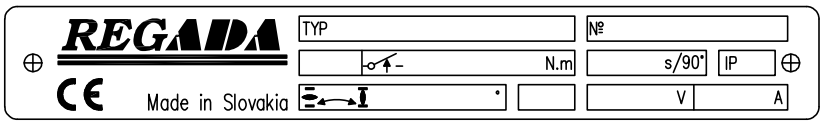

Warning plate:

Nameplate contains the basic data concerning identification, performance and electricity: indication of producer, type, serial number, max. load torque, operating time, protection code, operating angle, supply voltage and current.

Graphic symbols on electric actuator

The graphic symbols used on electric actuator substitute the text messages. Some of them are in accordance with EN ISO 7010, ISO 7000 and IEC 60417 within valid edition.

	Dangerous voltage	(EN ISO 7010-W012)
	Stroke of the electric part-turn actuator	
	Switching-off torque	
	Manual control	(0096 ISO 7000)
	Protection terminal	(5019 IEC 60417)

1.4 Warranty conditions

The supplier is responsible for completeness of the delivery and guarantees these specifications of the product which are stated in the Contract.

The supplier is not responsible for any deterioration of parameters caused by the customer during storage, unauthorised installation or improper operation.

1.5 Under-guarantee and after-guarantee service

Our customers are provided with professional service of our firm in installation, operation, service, maintenance, revision and help in troubleshooting for all our products.

Under-guarantee service is performed by the service department of the production plant, or by a contracted service centre according to a written claim.

In case of occurring of any fault please let us know it and state:

- basic data from nameplate (type code , serial number),
- type of fault - description of claimed fault (actuator employment, ambient parameters (temperature, humidity...)), duty cycle including frequency of switching, type of switching-off (position or torque), set switching-off torque),
- it is recommended to place also Installation certificate.

It is recommended to have **after-guarantee service** performed by the service department of the production plant, or by a contracted service centre.

1.5.1 Life of actuators

The lifetime of an electric actuator (EA) is at least 6 years.
EA used for closing mode (closing valves) comply with the requirements for at least **15,000 working cycles** (cycle C – O – C: for part-turn EA)
EA used for regulating/modulating operation (control valves) comply with the below stated numbers of **operating hours** at the total number of 1 million start-ups:

Switching frequency				
max. 1,200 [h^{-1}]	1,000 [h^{-1}]	500 [h^{-1}]	250 [h^{-1}]	125 [h^{-1}]
Minimal lifetime expectancy – number of operating hours				
850	1,000	2,000	4,000	8,000

Time of **net operation** is min. 200 hours, max. 2,000 hours.
Lifetime at operating hours depends on loading and switching frequency.
Note : High switching frequency does not ensure better regulation. Setting of regulation parameters should be therefore made with the inevitably necessary switching frequency needed for the process in question.

1.6 Operation conditions

1.6.1 Product location, operation position and use of stop ends

- EA can be installed and operated at sheltered areas of industrial plants without temperature and humidity regulation, protected against climate effects (e.g. direct sunshine).
- EA have to be placed with the view of access toward wheel of manual operating, top cover and cable gland.
- Installation and operation of EA is possible in **any position.** Usual position has vertical axis position of output part above armature and with control at the top.
- **Operating *angle adjusted by stop ends must be greater than angle adjusted by switches S3 and S4. Fixed stop ends are used only for localisation of a position by manual adjusting of the actuator. Use of fixed stop ends in motor-operated operation of actuator is impermissible!***

Warning:
When the EA is installed in open air, **it must be** sheltered lightly to protect is against direct effects of atmosphere.
When installed in the areas with relative humidity more than 80%, in open air under a shelter and in tropic environment it is needed to connect the space heater directly – without a thermal switch.

1.6.2 Operation Environment

CLIMATE GROUPS AND TYPES

According to standard IEC 60 721-2-1:
EA have to resist external effects and operate reliably:
in climatic conditions for the group / type of climate:
- version **„standard“**- for climate group **Restricted** (R) + /Warm temperature (WT), Warm Dry (WDr), Mild Warm Dry (MWDr) and Extremely Warm Dry (EWDr) with corrosion resistance C3 resp. C4 (EN ISO 12944-2), with temperatures -25°C to +55°C

Besides this according to GOST 15 150- 69:
- version **„tropical“** meet with **Dry and Damp tropics**, for climate types Warm Temperate (WT), Warm Dry (WDr), Mild Warm Dry (MWDr), Extremely Warm Dry (EWDr), Warm Damp (WDa) and Warm Damp Equable (WDaE) with corrosion resistance C3 (EN ISO 12944-2), with temperatures -25°C to +55°C.

Category of location
- versions **"standard"** and **"tropical"** are intended for location **under the** shelter (category 2)

Atmosphere type
- versions "**standard**" and "**tropical**" are intended for location in atmosphere type **II** industrial

(In accordance with IEC 60 364-3:1993)
the EA **SP and SPR** have to resist external effects and operate reliably:
In the conditions of the following types of environment:
- warm mild to very hot dry with temperature in range -25°C to +55°C .....**AA 7***

in industrial environment: at temperatures stated above
- with relative humidity 10 to 100 %, including the condensation of up to 0,029 kg water content per 1 kg of dry air at 27 °C, with temperatures from -25°C up to +55°C ..... **AB 7***
- with height above sea level 2 000 m, with barometric pressure range 86 to 108 kPa ..... **AC 1***
- with spraying or jet water from all directions–(protection enclosure IP x5) ..... **AD 5***
- with shallow dive – (product in protection IP x 7) .....**AD 7***
- with strong dustiness – with a possibility of influences of inflammable, non-conducted and non-explosive dust; the middle layer of dust; the dust drop more than 350 but not more than 1000 mg/m^2 per day (products with protection enclosure of IP 6x).....**AE 6***
- with atmospheric occurrence of corrosive and pollution media (with high degree of atmosphere corrosive aggressiveness); important presence of corrosive pollution ..... **AF 2***
- with permanent exposure of big amount of corroding or contaminated chemicals and salt fog in execution for sea environment , for sewage water disposal plant and some chemical .....**AF 4***
- with a possibility of influences of mechanical stress:
  - medium sinusoid vibrations with frequency in range 10 up to 150 Hz, with shift amplitude of 0,15 mm for f<fp and acceleration amplitude 19,6 m/s2 for f>fp; (transition frequency fp is from 57 up to 62 Hz) ..... **AH 2***
  - medium impacts, shocks and vibrations ..... **AG 2***
- with serious danger of plants and moulds growing ..... **AK 2***
- with serious danger of animals occurrence (insects, birds, small animals) ..... **AL 2***
- with detrimental influence of radiation:
  - of stray current with intensity of magnetic field (direct and alternating of power supply frequency) to 400 A.m^{-1}..... **AM 2***
  - of sun radiation with intensity > 500 a ≤ 700 W/m^2 ..... **AN 2***
- with effects of medium seismic activity with acceleration > 300 Gal ≤ 600 Gal ..... **AP 3***
- with indirect danger of storm activity ..... **AQ 2***
- with fast moving of air and strong winds ..... **AR 3* , AS 3***
- with persons frequent touching earth potential (persons often touch conductive parts or they stand on the conductive basement) ..... **BC 3***

** Marking in accordance with IEC 60 364-3:1993.*

1.6.3 Power supply and duty cycle

Power supply:
electric motor..... **230/220 V AC** ±10%, or **24 V AC** ±10%, **120 V AC** ±10%
control ..... **230/220 V AC** ±10%, or **24 V AC** ±10%, **120 V AC** ±10%
transmitter ..... see chapter 1.8
Power supply frequency ..... 50 Hz or 60 Hz ± 2%

Note: At frequency of 60 Hz operating time is reduced by 1.2 times.

Duty cycle (according to EN (IEC) 60034-1.8):

EA SP are designed for ***remote control:***

- short-time operation **S2-10 min**
- intermitted operation **S4-25%, 6 up to 90 cycles per hour**

EA SPR are designed for ***automatic regulation:***

- intermitted operation **S4-25%, 90 up to 1200 cycles per hour**

Note:
EA SP is possible connect with external controller and use it as regulated EA and for this EA stand duty cycle and power parameters like for type SPR 0.1 with built-in controller.

1.7 Descriptions and function

The **SP and SPR** EA consist of two parts differing in their function.

The **gear part** is made up by a flange and a connected part for connection onto a controlled device, and gears placed in the bottom; on the other side drive mechanisms for control part units are surfaced.

The **control part (Fig.1)** is placed on a control board consisting of:

- electric motor (58) with capacitor (56)
- a torque unit (controlled with a worm axial shift)
- a position-signalling unit (54) with a position transmitter (57) - positioner (resistive - potentiometer, capacitive or an electronic position transmitter) and with a mechanical local position indicator
- a space heater with (55) a thermal switch (53)
- electric connection is realised using **terminal boards** (52**)** (located in the control area) and cable glends, or **connector** with cable glands.

Additional accessories:

Manual control
Local electric control module

The **SPR** version is equipped with an **electronic controller**. The position controller allows automatic position adjustment of the EA output part depending upon the input signal value and provides also additional functions.

Legend:

50 .....cable glands
51 .....terminal boards holder
52 .....terminal board
53 .....thermal switch
54 .....position unit
55 .....space heater
56 .....board with capacitor
57 .....transmitter
58 .....electric motor

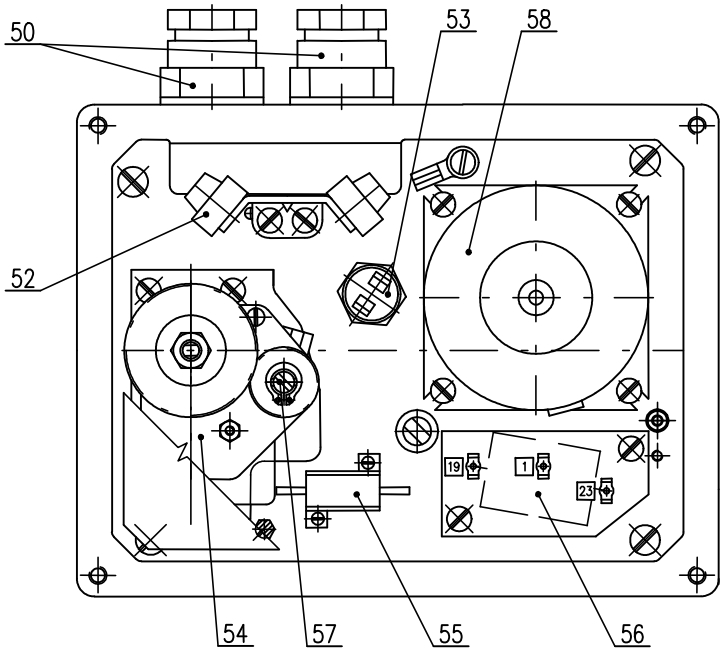

Fig.1

1.8 Basic specifications

1.8.1 Basic EA specifications

Max. load torque [Nm], **closing time** [s/90°], **operation stroke** [°] and electric motor parameters are given in Table 1.

Table 1: Basic Specifications

Type Number	Operating time ±10[%][3]		Operation stroke	Max. load torque	Weight	Electric motor[1]						
						Power supply nominal voltage		Nominal			Capacitor capacity	
								power 50Hz (60Hz)	speed 50Hz (60Hz)	current for 230/220 V AC (24 V AC) (120 V AC) V AC	24 V AC	230/220 V AC (120 V AC)
	[s/90°]		[°]	[Nm]	[kg]		[V AC/Hz] ±10%	[W]	[1/min]	[A]	[µF/V]	
	50 Hz	60 Hz										
1	2		3	4	5	6	7	8	9	10	11	
SP 0.1 / SPR 0.1, type number **331**	10	8	60°; 90°; 120°; 360°;	16	3,2 - 5,2	Single-phase	230/50 220/50 120/50 24/50 (230/60 220/60 120/60 24/60)	7,3 (8,0)	375 (450)	0,078 (0,78) (0,0913)	46/63	0,47/500 (2,2/250)
				20,(10Nm) [2]								
	20	17		32				7,3	375	0,051 (0,51)	30/63	0,33/500
	40	34		32			230/50 220/50; or 24/50	4,7				
	60	50						3,54	250	0,045 (0,45)	25,8/63	0,27/500
	80	66						2,75	375	0,04 (0,4)	25/63	0,27/500
	120	100						1	300	0,025 (0,25)	-	0,165/400
	160	135										
	40	34		50				7,3	375	0,078 (0,78)	46/63	0,47/500
	60	50						4,7		0,051 (0,51)	30/63	0,33/500
	80	66						3,54	250	0,045 (0,45)	25,8/63	0,27/500
	120	100						2,75	375	0,04 (0,4)	25/63	0,27/500
	160	135						1	300	0,025 (0,25)	-	0,165/400

1) Switching elements for different type of load (also for EA) defines standard EN (IEC) 60 947-4-1.

2) EA with maximal load torque 20 Nm are self-locking until values of torque 10 Nm only.

3) Anomaly of operating speed: .....-15% at temperatures under -10°C

.....-50 up to +30% in dependence on load at 24 V AC

Other specifications:

EA protection enclosure: ..... **IP 65** / **IP 67** (EN/IEC 60 529)

Mechanical ruggedness:

sinusoid vibrations ..... with frequency in range from 10 up to 150 Hz,
with shift amplitude of 0.15 mm for $f<f_p$
with acceleration amplitude of 19.6 m/s^2 for $f>f_P$
(transition frequency f_P is from 57 up to 62 Hz)

drop resistance: ..... 300 drops with acceleration 2 $m.s^{-2}$

seismic resistance: ..... amplitude of the shock off 6 on Richter scale

Self-locking: ..... guaranteed within 0% till 100% load torque

Position transmitters

Resistive – potentiometer:

Resistance (single **B1**): ..... 100 Ω, 2000 Ω
Resistance (double **B2**): ..... 2x100 Ω, 2x2000 Ω
Operating life of transmitter..... ..... 1.10^6 cycles
Load capacity:..... 0.5 W up to 40°C (0 W/125°C)
Maximum current load:..... 100 mA
Maximum current of sliding contact ..... max. 35 mA
Maximum supply voltage:..... $\sqrt{PxR}$ V AC/DC
Potentiometer linearity error:..... ±2 [%][1)]
Potentiometer hysteresis:..... max. 1.5 [%][1)]
Adjustment of actuators :
For SP: "O" (open)..... ≥ 93%, "Z" (closed) ..... ≤ 5%
For SPR: "O" (open)..... "O"..... ≥ 85% a ≤ 95%, "Z" (closed) ≥ 3 % a ≤ 7%

Capacitive (B3): non-contact, life 10^8 cycles

2-wire connection with power supply or without power supply

The current signal **4 ¸ 20 mA** (DC) is acquired from the capacitive transmitter supplied from the internal or an external voltage supply source. The electronics of the transmitter is protected against eventual wrong polarity and current overloading. The entire transmitter is galvanic insulated so several transmitters can be connected to one external voltage source.

Power supply voltage (with power supply) .....24 V DC
Power supply voltage (without power supply) .....18 to 28 V DC
Ripple voltage ..... max. 5%
Max power input .....0,6 W
Load resistance ..... 0 to 500 Ω
Load resistance can be single side grounded.
Influence of resistance on output current ..... 0,02%/100 Ω
Influence of voltage on output current.....0,02%/1V
Temperature dependency..... 0.5% / 10 °C
Output signal values at limit positions: ..... "O".... 20 mA (clamps 81,82)
.....Z"..... 4 mA (clamps 81,82)

Values tolerance of output signal of capacitive transmitter..... "Z" +0,2 mA
....."O" ±0,1 mA

Electronic positional transmitter (EPV) - converter R/I (B3)

a) 2-wire version - without built-in power supply, or with built-in power supply

Current signal ..... 4 ÷ 20 mA (DC)
Power supply voltage .....15 ÷ 30 V DC
Load resistance (at version without build-in power supply).....max. $R_L=(U_n-9V)/0,02A$ [Ω]
(U_n - power supply voltage [V])
Load resistance (at version with build-in power supply).....max. R_L = 750 Ω
Temperature dependency ..... max. 0,020 mA / 10 °C
Output signal values at limit positions: ..... "O".... 20 mA (clamps 81,82)
.....Z"..... 4 mA (clamps 81,82)
Values tolerance of output signal of EPV..... "Z" +0,2 mA
....."O" ±0,1 mA

b) 3-wire version - without built-in power supply, or with built-in power supply

Current signal ..... 0 ÷ 20 mA (DC)
Current signal ..... 4 ÷ 20 mA (DC)
Current signal ..... 0 ÷ 5 mA (DC)
Power supply voltage (at version without built-in power supply) ..... 24 V DC ±1,5%
Load resistance ..... max. 3 kΩ
Temperature dependency ..... max. 0,020 mA / 10 °C
Output signal values at limit positions: ..... "O".... 20 mA or 5 mA (clamps 81,82)
..... "Z"..... 0 mA or 4 mA (clamps 81,82)
Values tolerance of output signal of EPV and capacitive transmitter ..... "Z" +0,2 mA

..... "O“ ±0,1 mA
EPV and capacitive transmitter linearity error: ..... ±2 %[1)]
EPV and capacitive transmitter hysteresis: ..... max. 1.5 %[1)]

[1)] *from rated value of transmitter referred to output values*

Electronic position controller (N)

Controller software equipment:

A) Function and parameters

programmable **functions:**

- ..with functional buttons **SW1, SW2** and LED diodes **D3**, **D4** directly placed on controller
- ..with computer or terminal equipped with corresponding programme, using RS 232 interface.

programmable **parameters:**

- ..control signal
- ..response to SYS-TEST signal
- ..mirroring (ascending/descending characteristics)
- ..insensitiveness
- ..EA limit positions (only with computer and ZP2 programme)
- ..way of regulation

B) Operation states of controller

Error message from error memory: (using LED diodes and RS 232 and personal computer)

- ..control signal missing or faulty
- .. input value of current control signal under 3.5 mA
- ..existence of SYS-TEST signal
- ..activity of switches
- ..failure of feedback position transmitter

Statistic data: (using RS 232 and personal computer)

- ..number of controller operation hours
- ..frequency of relay switching in direction "opening"
- ..frequency of relay switching in direction "closing"

Supply voltage: ..... terminal 61 (L1) -1(N) - 230 V AC, ±10%
Frequency: ..... 50/60 Hz ±2%
Input control signals - analogue: ..... 0 - 20 mA
..... 4 - 20 mA
..... 0 - 10 V
(Actuator opens at rising of control signal.)
Controller linearity: ..... 0.5 %
Controller insensitiveness: ..... 1 - 10% (adjustable)
Feedback (position transmitter): ..... resistive 100 up to 10,000 Ω
..... current 4 up to 20 mA
Power outputs: ..... 2x relay 5A/250V AC
Digital outputs: ..... 4x LED (supply, error, adjustment, "opening", "closing" - with two-colour LED)
Error status: ..... control switch 24 V, 2W - POR
Reaction at error situation: ..... transmitter error - error message LED
Control signal missing: ..... error message LED
SYS mode: ..... error message LED
Adjusters: ..... communication connector
..... 2x calibrating and adjusting button

Switching-off:

Switching-off voltage: 250 V(AC); 50/60 Hz; 6(4) A; cos φ=0,6, resp.: 24 V (DC); 2 A; T=L/R=3ms

Space heater (E1)

Space heater - supply voltage: ..... corresponding with motor supply voltage (max. 250 V AC)
Space heater power output: ..... max. 10 W/55°C

Thermal switch of space heater

Supply voltage: ..... corresponding with motor supply voltage (max. 250V AC, 5A)
Switching-on temperature: ..... +20°C ± 3°C
Switching-off temperature: ..... +30°C ± 4°C

Manual control: ..... with handwheel; rotating counter-clockwisely (clockwisely) EA output part is moving in direction "Z" ("O")

Output part backlash:..... max. 1.5°for SP, at load of 5% of load torque
..... max. <1°for SPR, at load of 5% of load torque

Adjustment of limit positions:

Limit position switches are adjusted with accuracy ± 1°.

Additional position switches are adjusted 15° before end positions.

1.8.2 Mechanical connection

- flange (ISO 5211)
- stand and lever

Basic and connecting dimensions are given in dimensional drawings

1.8.3 Electric connection

- **with terminal board (X):** max. 23 terminals, nominal connecting cable size max. 2,5 mm^2
  - 3 cable glands: 1xM20x1,5 - connection of cables diameter from 8 to 14,5 and 2x M16x1,5 - connection of cables diameter from 6 to 10,5 mm .

When using two types of extended cable glands - diameter from 9 to 13 mm (max for 2 positions, without combination with cable glands from 14 to 18 mm) resp. diameter from 14 to 18 mm (just for one position).

with protection terminal:

external and internal, mutually connected and marked with protection earthling mark

Electric connection - according to wiring diagrams.

1.9 Conservation, packing, transport, storing and unpacking

Surfaces without surface treatment are treated by conservation preparation MOGUL LV 2-3 before packaging .

Conservation is not necessary if the following storage conditions are complied with:

- Storage temperature: -10 to +50 °C
- Relative air humidity max.80 %
- Electric actuators and their accessories must be stored in dry, well ventilated covered spaces, protected against impurities, dust, soil humidity (by placement to racks, or on palettes), chemicals and foreign interventions
- There shall be no corrosive gases present in the storage areas.

The **EA SP or SPR** are delivered in solid packages guaranteeing resistance in accordance with EN 60 654 (IEC 60 654-1 and IEC 60 654-3).

Package is a box. Products in boxes is possible to load on the pallets (pallet is returnable). On the outer side of the package is stated:

- manufacturer label,
- name and type of product,
- number of pieces,
- other data – notices and stickers.

The forwarder is obliged to secure packed products, loaded on transportation means, against self-motion; if open transportation means are used, to secure their protection against atmospheric precipitations and splashing water. Displacement and securing of products in transportation means must provide their stable position, exclude the possibility of their inter-collision and their collision with the vehicle walls.

Transportation can be executed by heatless and non hermetic spaces of transportation vehicles with influences within the range:

- temperature: -25° C up to +70° C (a strange version –45 ° C up to +45 ° C
- humidity: 5 up to 100 %, with max. water content 0.029 kg/kg of dry air
- barometric pressure 86 up to 108 kPa

Upon receiving of EA examine, if during transportation, resp. storing did not come to its damage. At the same time verify, if the data on the labels corresponds to accompanying documentation and purchase-sale contract / order. Eventual discrepancies, faults and damages should be reported without any delay to supplier.

Electric actuators and their accessories must be stored in dry, well ventilated covered spaces, protected against impurities, dust, soil humidity (by placement to racks, or on pa-lettes), chemicals and foreign interventions, at ambient temperature from -10°C up to +50°C and at relative air humidity max. 80 %.

It is not acceptable to store EA outdoors, or in areas not protected against direct climate influence!

Eventual damages to surface finish remove without delay – thus preventing damage by corrosion.

If storing takes longer than 1 year, it is necessary to inspect lubrication fillings before putting EA into operation.

Assembled EA, but not put into operation is necessary to protect by the equivalent method as during storage (for example suitable protective cover).

After assembly to the armature in free and wet areas, or in areas with temperature changes, connect without delay heating resistor – thus preventing damages caused by corrosion from liquefied water in the control area.

Excessive preserving grease remove just before putting EA into operation.

1.10 Assessment of the product and packaging and removal of contamination

The product and its package are made of recycling materials. Do not throw the single parts of the package and of the product after their life but sort them according to instructions in corresponding executives or regulations of environment protection, and allow their recycling.

The product and its packing are not a source of any environment pollution or contamination and do not contain any dangerous waste.

2. Installation and dismantling of actuator

Abide by safety measures!

Notes:

Repeatedly verify whether placing of EA correspondents to part "Operating conditions". If actual conditions differ from recommended, it is necessary to consult it with manufacturer.

Before starting of mounting the EA onto the valve:

- Check again whether the EA was not damaged during storing.
- Check whether the adjusted operation angle and connecting dimensions of the actuator (see the nameplate) are in compliance with the valve parameters.

In case of inconsonance, perform adjusting according to the part Adjustment.

2.1 Installation

EA is by the producer adjusted to parameters according to the nameplate, with connecting dimensions according to the corresponding dimensional drawing and put it to a mid-position.

2.1.1 Mechanical connection

The actuators can be installed and operated in any position. While installing leave enough space for dismantling of the upper cover to allow adjusting of the control parts.

Before installation clean the contact areas of the actuator and the valve, coat the output shaft and sliding areas with a grease without any acids.

The actuators SP(R) 0.1 are available in the following versions:

a) With a flange F 03, F 04 or F05 in accordance with ISO 5211 Standard

b) With a stand and a lever, a lever and a pull-rod or without any lever with output shaft of square section 11x11 mm or circular section ∅22 mm.

The flange actuators are to be connected with a valve using four bolts with a thread M5 (F03 and F04 flanges) or M6 (F05 flange). The screw has to be screwed into depth of 10 mm or 12 mm.

The actuators with a stand are fixed to the base with two screws with thread 10. The screw depth in the steel base must not be less than 10 mm, in case of a base made of aluminium alloy not less than 16 mm.

The actuators with a small lever are connected with a controlled device with a lever mechanism consisting of the two pull-rod TV-160 and a 1/4 " tube with threads on the both ends. The actuators with a large lever are connected with a controlled device with a lever mechanism consisting of the two pull-rod TV-160 and a 1/2 " tube with threads on the both ends. While mounting the coarse setting of the small lever on the actuator can be changed with turning of the hub on the output shaft by 90 ° or with turning of the lever on the hub by 60 ° or with the combination of the two operations by 30 °. Setting of the large lever position can be reached with turning of the lever on the splined shaft.

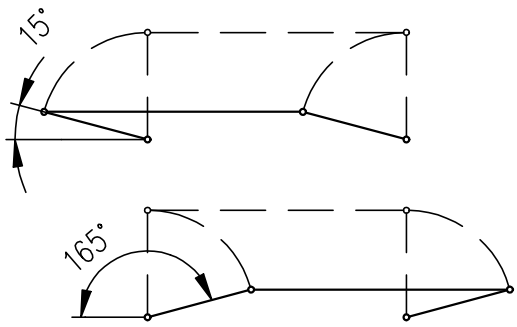

Fig.2

2.1.2 Electric connection and checking of function

1. Follow instructions in the part "Requirements for professional qualification"!
2. While laying electrical line abide by the instructions for heavy current installations.
3. Cables to terminal boards or connectors lead through cable glands. The cable jacket diameters must conform to the extent specified in Chapter 1.8.3!
4. Before initiation ES into operation internal and external protection terminals are needed to be connected.
5. Feeding cables are to be fixed to the solid construction at most 150 mm from the cable glands.
6. Cables of input controlling signals into a controller and output signals from a converter must be conducted separately from power conductors or it is possible to use shielded cables.
7. To prevent moisture from entering the actuator around the connecting cables, the cables must be sealed with silicone material at the point of penetration through device shell.

Connecting with the master system:
The EA can be controlled with:

- a built-in position controller
- an external position controller

1. If the EA is controlled with an external controller using unified signal from a two- wire transmitter (capacitive or resistive with a converter in two-wire connection), it is needed to arrange connecting of the two-wire transmitter loop to electrical earth of the successive external controller!
2. Connection can be performed only in one point, in any part of loop out of the EA.
3. Electronics of the two-wire transmitters is galvanically insulated that is why it can serve as an external source for supplying of several transmitters (their number depends on current which the source can supply).
4. Do not connect and disconnect live connectors !

Notes:

1. *Wires of input control signals to controller and output signals from current converter it is necessary to lead them separately with thrust wires or it is necessary to use shielded wires*
2. *The EA are delivered with bushings, which in case of tight putting on the leads assure protection enclosure up to IP 68. For required protection enclosure it is needed to use rings according to the actual cable diameter.*
3. *While fixing the cable it is needed to count with allowed bend radius to avoid damaging or deformation of the sealing element of the bushing. The leads are to be fixed with the solid construction at most 150 mm from the bushings.*
4. *It is recommended to use screened cables to connect remote transmitters.*
5. *The face areas of the control part cover have to be before re-mounting clean, coated with a grease without any acid (e.g. vaseline) and sealing not damaged to avoid joint corrosion.*
6. *Reversation of the EA is sure, if the period between switching-off and switching-on of power supply for the reversed movement of the output part is minimally 50 ms.*
7. *Delay after switching-off, i.e. time since a reaction of switches till the motor is dead can be maximally 20 ms.*
8. *It is recommended to have the corresponding direction protection switched-off directly with the corresponding position or torque switches.*

After electric connection it is recommended:
Checking of wiring. Set the actuator into a mid-position. Check the right direction of output shaft movement with pressing the button "closing" (on a manual control board or on a test button panel) and the output pointer turn clockwisely looking from above. If not change the order of the mains phases.
Checking of position switches. While the actuator is running in the chosen direction consequently switch contacts of switches pressing springs of correspondent switches. In case of correct connection the actuator is to stop. If any of the functions is not correct check the connection in accordance with the wiring diagram.

In the **SPR version** with the built-in electronic controller it is needed to perform **autocalibration** for assuring optimal functioning.

The procedure is as follows

Press the button **SW1** for about 2 sec (i.e. till the **D3** diode is got on) to set the controller to the **autocalibration** mode. During this process the controller checks the feedback transmitter and the sense of turning, puts the EA to the positions open and closed, measures inertia mass in the directions "opening" and "closing", and loads the adjusted parameters into the EEPROM memory. In case that during the initialisation process an error occurs (e.g. in connection or adjustment) the initialisation process will be interrupted and the controller with the **D4** diode reports about the type of the error. Else after finishing the initialisation process the controller is put into the **regulation mode**. If needed to change adjusted parameters of the controller follow instructions given in the part Adjusting of actuator.

2.2 Dismantling

Before dismantling it is required to disconnect the EA from mains!
Do not connect and disconnect live connectors!

- Disconnect the EA from mains.
- Disconnect the leads from the EA terminal boards and loosen the cables from cable glands.
- Loosen the fixing screws of the EA flange and disconnect the EA from the valve.
- While sending the EA to be repaired put it into a package solid enough to avoid damages of the EA during transportation.

3. Adjusting of actuator

Attention! *See chapter 1.2.2 Requirements for professional qualification …*
Disconnect the electrical servo-drive from electrical power network!
Observe safety regulations!

The adjustment can be performed at a mechanically and electrically connected EA. This part describes adjustment of EA to specified parameters in case that any unit of EA is reset. Laying of adjusters of the control board is shown on Fig.1.

The control parts designed for adjustment are accessible after removing of the actuator upper cover. Unscrew the four screws fixing the cover to the bottom case, and remove the cover.

After adjustment fix again the cover with the four screws. While placing the cover onto the actuator have the position unit shaft fitting in the pointer shaft recess. Having the cover on and the screws tightened adjust the pointer in accordance with the Chapter 4.6.

3.1 Output position changes

In the plant the end positions of the actuators are adjusted in accordance with the dimensional drawings. If while the mechanical disengagement in accordance with the Chapter 2.1 the adjustment does not meet the requirements, it is needed to turn the fixed operation angle 60°, 90°, 120° or 360° by any value (in the limit position "closed"). While output position changing it is needed to adjust the actuator in accordance with the Chapters 3.2 to 3.7.

If during the adjustment the actuator stops after switching-off the end switch S4 before the required position, it is needed to turn the cam V4 counter-clockwisely until the required limit position "closed" is set (Chapter 3.2).

3.2 Adjustment of position switches (version without position transmitter) (Fig.3)

While adjusting follow these steps:

- Set the actuator to the end position "closed".
- Loosen the nuts M1 and M2 locking the cams enough to have the Belleville spring creating the pressure on them.
- Turn the cam V4 counter-clockwisely until the switch S4 switches.
- Reset the actuator by the operation angle (60°, 90°, 120° or 360°) to the end position "open".
- If during resetting the actuator stops because of switching-off of the end switch S3 before the required position, it is needed after loosening of the nuts M1 and M2 to turn the cam V3 counter-clockwisely until the required end position "open" is set.
- Turn the cam V3 clock-wisely until the switch S3 switches.

Set additional positional switches following these steps:

- Set the actuator to the position required for switching of the switch S6 in the direction "closing".
- Turn the cam V6 counter-clockwisely until the switch S6 switches.
- Set the actuator to the position where the switch S5 is to switch in the direction "opening".
- Turn the cam V5 clock-wisely until the switch S5 switches.
- After adjustment of the position switches fix the cams with nuts M1 and M2.

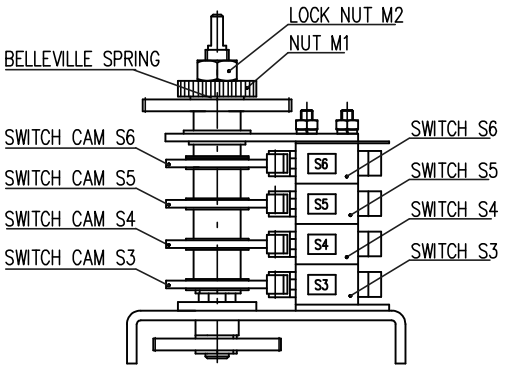

Fig.3

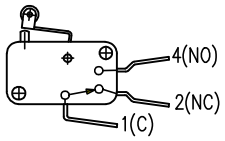

Note:
The position switches of the actuator with the position transmitter can be set in connection with the range possibilities of the transmitter.

3.3 Adjustment of resistant transmitter

The **resistant transmitter** is in the EA **SP** used to function as a remote position indicator; in the EA **SPR** to function as a feedback in the position controller and if needed also in the position of a remote resistant position indicator.

Before the resistant transmitter adjustment the position switches have to be adjusted.

The transmitter cannot be adjusted to another operating angle as stated on the nameplate of the actuator.

Adjustment consists in setting of the resistance in the defined limit position of the EA.

Notes:

1. *In case that the EA is not used in the whole stroke range given on the nameplate, the resistance in the limit position "open" is proportionally reduced.*
2. *In the EA **SPR** 2000W resistant transmitters are used. In the other cases if the resistant branch is lead to the terminal board the resistance of the transmitters is according to the customer's specification.*

To adjust the transmitter follow these steps:

- Loosen the fixing screws of the transmitter holder and push the transmitter out of mesh.
- Connect a meter for resistance measuring to the terminals 71 and 73 of the EA **SP** terminal board, or to the terminals 7 and 10 of the EA **SPR** terminal board.
- Put the actuator to the position ”closed“ (with the handwheel, or with the local electric position control until the corresponding position switch S4).
- Rotate the transmitter shaft until resistance of ≤5% of the nominal transmitter resistance can be read on the meter in case of EA **SP**, and 3 up to 7% of the nominal transmitter resistance in case of EA **SPR,** i.e. with the resistant transmitter with the converter PTK1.
- In the position put the transmitter to mesh with the drive wheel and fix the fixing screws on the transmitter holder.
- Disconnect the meter from the terminal board.

3.4 Adjustment of the Electronic Position Transmitter (EPV) - the Resistive Transmitter (Potentiometer) with the Converter PTK 1

3.4.1 EPV – the 2-wire version (Fig. 4)

The position transmitter with the converter PTK1 is in the plant adjusted to have the output current signal on the terminals 81-82 as follows:

- in the position ”open“ ..... 20 mA
- in the position ”closed“ ..... 4 mA

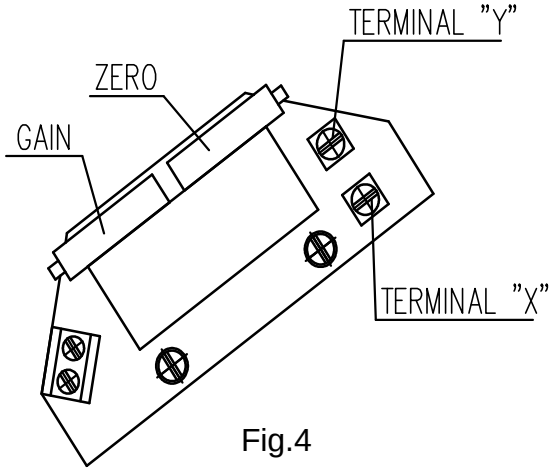

Fig.4

If the transmitter requires a new adjustment follow these steps:

- Put the actuator to the position ”closed“ and switch the power supply off.
- Adjust the resistive transmitter according to the previous chapter. The resistance is to be metered on the terminals X-Y (Fig. 4). The used transmitter resistance is *100 W*
- Switch the converter's power supply on.
- Turn the adjusting trimmer ZERO (Fig. 4) to adjust the output current signal rate measured on the terminals 81-82 to 4mA.
- Set the actuator to the position ”open“.
- Turn the adjusting trimmer GAIN (Fig. 4) to adjust the output current signal rate measured on the terminals 81-82 to 20mA.
- Check the output signal of the converter in the both limit positions, and repeat the procedure if needed.

Note:
The output signal of 4-20mA can be adjusted at the range from 75 up to 100% of the rated stroke stated on the actuator's nameplate. At values less than 75% the value 20mA is reduced proportionally.

Adjustment of the EPV in Electric Actuators SPR with controllers

- Disconnect the circuit with removing a jumper on the terminals 81 and 82.
- Disconnect the control signal from the terminals 86/87 and 88.
- Set the actuator to the direction ”OPENING” or “CLOSING” with the handwheel, or with connecting power to the terminals 1 and 20 for the direction “OPENING” or 1 and 24 for the direction “CLOSING”.
- Set the actuator to the position “CLOSING“ and switch the converter off on the terminals 1 a 61.
- Adjust the resistive transmitter according to the previous chapter. The resistance is to be metered on the terminals X-Y (Fig. 4).
- Connect power supply to the terminals 1 and 61.
- Turn the adjusting trimmer ZERO (Fig. 4) to adjust the output current signal rate measured on the terminals 81-82 to 4mA.
- Set the actuator to the position “open”.
- Turn the adjusting trimmer GAIN (Fig. 4) to adjust the output current signal rate measured on the terminals 81-82 to 20mA.
- Check the output signal of the converter in the both limit positions, and repeat the procedure if needed.
- Having the transmitter adjusted put the jumper again on the terminals 81 and 82 in case that the output signal wont be used (the circuit through the terminals 81 and 82 should be closed).
- Connect the control signal to the terminals 86/87 and 88.

3.4.2 EPV – 3-wire version (Fig. 5)

The resistive transmitter with the converter is in the plant adjusted to have the output current signal metered on the terminals 81-82 as follows:

- in the position „open“ ..... 20 mA or 5 mA
- in the position „closed“ ..... 0 mA or4 mA

according to the specified version of the converter.

If the transmitter requires a new adjustment follow these steps:

- Put the actuator to the position „closed“ and switch the power supply off.
- Adjust the resistive transmitter according to the previous chapter. The resistance is to be metered on the terminals X-Y (Fig. 5). The used transmitter resistance is *2000 W or 100 W.*
- Switch the converter's power supply on.
- Turn the adjusting trimmer ZERO (Fig. 5) to adjust the output current signal rate measured on the terminals 81-82 to 0 mA or 4mA.
- Set the actuator to the position ”open“.
- Turn the adjusting trimmer GAIN (Fig. 5) to adjust the output current signal rate measured on the terminals 81-82 to 20mA or 5 mA.
- Check the output signal of the converter in the both limit positions, and repeat the procedure if needed.

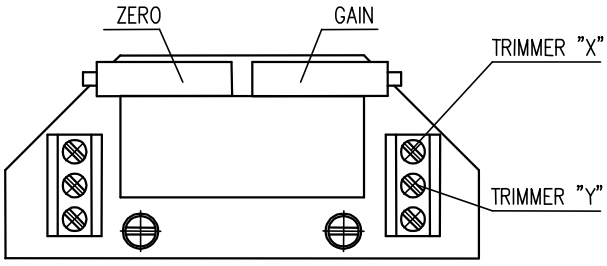

[Fig. 5]

Note:
The output signal of (0-20mA, 4-20mA or 0-5mA - according to the specification) can be adjusted at the range from 85 up to 100% of the rated stroke stated on the actuator's nameplate. At values less than 85% the value of the output signal is reduced proportionally.

3.5 Adjustment of Capacitive Transmitter CPT1/A

The chapter describes adjustment of the capacitive transmitter to the specified parameters (standard values of output signals) in case they are reset. The capacitive transmitter serves as a position transmitter of electric actuators with unified output signal of 4÷20 mA in electric actuators **SP 0.1**, or as a feedback of a position controller, or if required it functions also as a remote position transmitter of electric actuators with unified output signal of 4÷20 mA in electric actuators **SP 0.1 with controllers.**

Note:
In case that reversed output signals are needed (in the position ”OPEN” minimum output signal) contact personnel of service centres.

The capacitive transmitter CPT1/A is adjusted by the producer to the fixed operation stroke according to the order and wired according to the wiring diagrams placed into the cover. Check the power supply of the user after connecting to terminal of the terminal board before the transmitter is electrically checked. Adjustment of the capacitive transmitter can be performed when the position switches are adjusted. The adjustment is performed with the power supply of 230 V/50 Hz and ambient temperature of 20± 5°C.
The following versions of electric actuators with built capacitive transmitters can be specified :

A) The version without any power supply (2-wire version) for EA **SP 0.1**
B) The version with a power supply (2-wire version) for EA **SP 0.1**
C) The version CPT as a feedback to the position controller for EA **SP 0.1 with controllers**

A.) Adjustment of the Capacitive Transmitter without any Power Supply

Before connecting check the power supply. The measured voltage should be in range from 18 up to 28 V DC.

The voltage of the power supply must not be in any case higher than 30 V DC. The transmitter can be irreversibly damaged!

While checking or adjusting the output signal of 4÷20 mA follow these steps:

- Connect a mA meter of precision class 0,5 and loading resistance lower than 500 Ω serially with the transmitter (pole „-„; terminal 82)
- Put the actuator to the position ”CLOSED”, the signal value should decrease.
- Check the signal value for the position ”CLOSED” (4 mA).
- Tune the signal with loosening the fixing screws (15) and turning the trimmer (10) until the required value of 4 mA is reached. Tighten the fixing screws.
- Put the actuator to the position ”OPEN”, the signal value should raise.
- Check the signal value for the position ”OPEN” (20 mA).
- Tune the signal with turning the trimmer (20) until the required value of 20 mA is reached.
- Check the signal value for the position ”CLOSED” and then for the position ”OPEN”.
- Repeat the procedure until the change from 4 to 20 mA is reached with deviation less then 0,5 %.
- Disconnect the meter and lock the screws with a varnish.

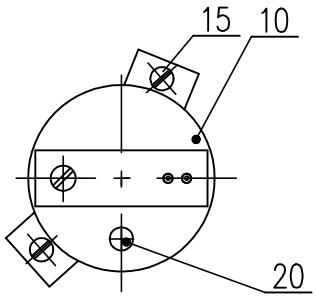

Fig.6

B.) Adjustment of the Capacitive Transmitter with the Power Supply

1.) Check the power supply: 230 V AC ±10% on the terminals 78,79

2.) While checking or adjusting the output signal of 4÷20 mA follow these steps:

- Connect a mA meter of precision class 0,5 and loading resistance lower than 500 Ω on the terminals 81, 82.
- Follow the procedure described in the previous chapter A.

C.) Adjustment of the Capacitive Transmitter Served as a Feedback of the Position Controller

While checking or adjusting the output signal of 4÷20 mA follow these steps:

- Disconnect the circuit on the terminals 81 and 82 removing the jumper.
- Connect power supply to the terminals 1 and 61.
- Disconnect the control signal from the terminals 86 and 88.
- Put the actuator to the direction ”OPENING” or ”CLOSING” with the handwheel or connecting power supply to the terminals 1 and 200 for the direction ”OPENING”, or 1 and 24 for the direction ”CLOSING”.
- Connect a mA meter of precision class 0,5 (e.g. digital) and loading resistance lower than 500 Ω on the terminals 81,82.
- Follow the procedure for the version without any power supply described in the previous chapter A.
- Having the transmitter adjusted put the jumper again on the terminals 81 and 82 in case that the output signal wont be used (the circuit through the terminals 81 and 82 should be closed).
- Connect the control signal to the terminals 86 and 88

The user has to arrange grounding of the 2-wire circuit of the capacitive transmitter to the electrical ground of a joined controller, computer, etc. The grounding should be performed only in one place in any part of the circuit outside the electric actuator!

Note:
The trimmer (20) can be used to adjust the output signal of the capacitive transmitter to any value of operation stroke in range from ca 40% up to 100% of the value of the operation stroke adjusted by the producer and stated on the actuator's nameplate.

3.6 Adjustment of pointer

After adjustment of the actuator and putting the cover on it is needed to set the pointer. The pointer can be set with turning of the pointer with a hand against the mark (Fig.7) in the position "open" or "closed".

Note: The end "open" and "closed" positions on the pointer label are valid for nominal actuator angles (60 °, 90 °, 120 °, 360 °) in accordance with the type label of the actuator. In

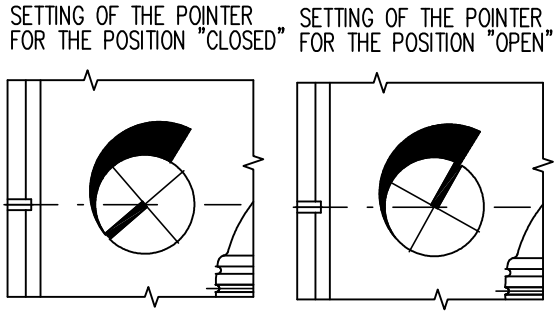

Fig.7

case that the operation angle is smaller, the pointer does not operate in the whole range of the pointer label (the turning is proportional with the operation angle reduction).

3.7 Adjustment of position controller (Fig. 8)

The built-in position controller REGADA of new generation is a user-friendly control system to control actuators with an analogue signal. The controller takes advantages of high-power RISC processor MICROCHIP to perform all functions. It provides also continuous automotive diagnostics of the system, error messages as well as number of relay switching and number of controller's operation hours. Placing an analogue signal onto the input terminals of the terminal board 86/87 (GND, -) and 88 (+) causes that the EA output is reset.

Required parameters and functions can be programmed using function buttons SW1 - SW2 and LED diodes D3 - D4 placed directly on the controller, see Table 2.

3.7.1 Setting of controller

The controller's microprocessor unit is in the production plant programmed to parameters given in **Table 2** (Note 2).

Setting of the controller is performed using buttons and LED diodes.

Adjust the position and torque switches and the position transmitter before adjustment of the controller.

Laying of adjusters and signalling elements on the board of the REGADA controller is shown on Fig. 8:

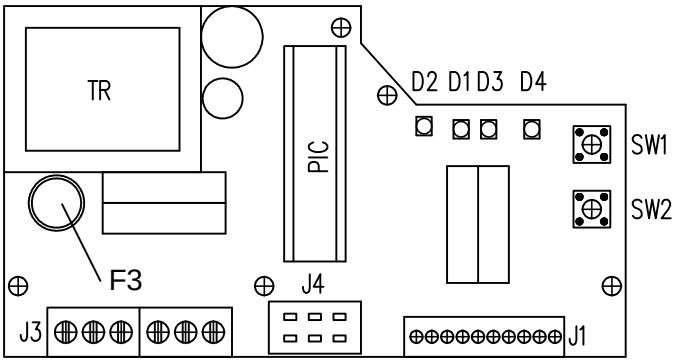

Fig. 8

SW1 button	starts an initialisation routine an allows listing in the adjust menus
SW2 button	setting of parameters in the chosen menu
D1 diode	power on indication
D2 diode	motion to the direction "opening" indication (green) - "closing" (red) indication
D3 diode	(yellow light) number of blinking codes indicates chosen adjust menu
D4 diode	(red light) number of blinking codes indicates adjusted parameter of the controller from the chosen menu

Table 2:

D3 (yellow) diode number of blinking	**Adjust menu**	**D4 (red) diode** number of blinking	**Adjusted parameter**
1 blink	control signal	1 blink	0-20mA
		2 blinks	**4-20 mA (*) (**)**
		3 blinks	0-10V DC
2 blinks	response for signal SYS-TEST	1 blink	EA opens receiving signal SYS
		2 blinks	EA closes receiving signal SYS
		3 blinks	**EA stops receiving signal SYS (*)**
3 blinks	mirroring (ascending/descending characteristics)	1 blink	EA CLOSING at increasing of control signal
		2 blinks	**EA OPENING at increasing of control signal (*)**
4 blinks	insensitiveness of controller	1 to 10 blinks	insensitiveness of controller of 1-10% (3% set by the producer) (*)
5 blinks	way of regulation	1 blink	narrow torque
		2 blinks	**narrow position (*)**
		3 blinks	wide torque
		4 blinks	wide position

Notes:
1. *The controller at autocalibration automatically sets the feedback type - resistant/current*
2. *(*) Parameters set in the production plant, if customer has not stated else.*
3. *(**) Input signal 4 mA - position "closed"*
   20 mA - position "open"

Standard setting of controller (programmed RESET of controller) - in case of any problems with setting of the parameters it is possible with pressing both **SW1 and SW2** at the same time and then switching power on to set the standard parameters.

Controller setting procedure:
The initialisation routine starts at the switched-on controller, zero system deviation and short pressing of the SW1 button for ca 2 sec (i.e. until the diode D3 got on). Loosing the button some of the default menus starts (usually control signal) what is shown with 1 blink on the D3 diode as well as one of the default parameters (usually control signal of 4-20mA) what is shown with 1 blink on the D4 diode. Then the required parameters of the controller can be changed according to Table 2:

- press shortly the SW1 button to list the menu shown with the blinking number on the D4 diode.
- press shortly the SW2 button to set parameters shown with the blinking number on the D4 diode.

After changing of the parameters according to user's wishes, put the controller to autocalibration with pressing the SW1 button for ca 2 sec (i.e. until the diode D3 got on). During this process the controller performs the feedback transmitter and turning sense checking, sets actuator to the positions "open" and "closed", measures inertia mass in the directions "opening" and "closing", and loads the adjusted parameters into the EEPROM memory. In case that during the initialisation process an error occurs (e.g. in connection or adjustment) the initialisation process will be interrupted and the controller with the D4 diode reports about the type of the error. Else after finishing the initialisation process the controller is put into the regulation mode.

Error messages of the controller with D4 diode at initialisation

4 blinks ..... improper connection of the torque switches
5 blinks ..... improper connection of the feedback transmitter
8 blinks bad sense of actuator's turning direction or adverse connection of the feedback transmitter

3.7.2 Watching operation and error states

Watching operation and error states is possible with the EA open.

a) Operation status with the D3 LED diode indicating:

- it is continuously lighting - the controller regulates
- it is continuously not lighting - system deviation in the insensitiveness range - the EA has stopped

b) Error state with the D4 and D3 LED diodes indicating - D4 continuously lighting, D3 indicates error state with blinking

1 blink (repeated)	indication of the "TEST" mode - the EA is put to the position according to the signal in the "TEST" menu (at connecting the 66 and 86/87 terminals)
2 blinks (repeating after short pause)	missing of control signal - the EA is put to the position according to the signal in the "TEST" menu
4 blinks (repeating after short pause)	torque switches activity indication (the EA switched-off with the torque switches in a mid-position)
5 blinks (repeating after short pause)	failure of the feedback transmitter - the EA is put to the position according to the signal in the "TEST" menu
7 blinks (repeating after short pause)	control signal (current at range 4-20mA less than 4mA (3.5mA)).

3.8 Adjusting of stop ends

Mechanical stop ends is possible to adjust in scale from –5 °C to 10 °C for each position dependently. Electric actuator is by producer adjusted to operating angle according to the specification.

While setting, adjusting and resetting stop ends follow next steps:

- loosen the counter nut of specific stop end
- set the stop end to the new position
- lock the stop end screw with the counter nut
- adjust the electric end position for switch S3 or S4 as is significated in article 4.2.

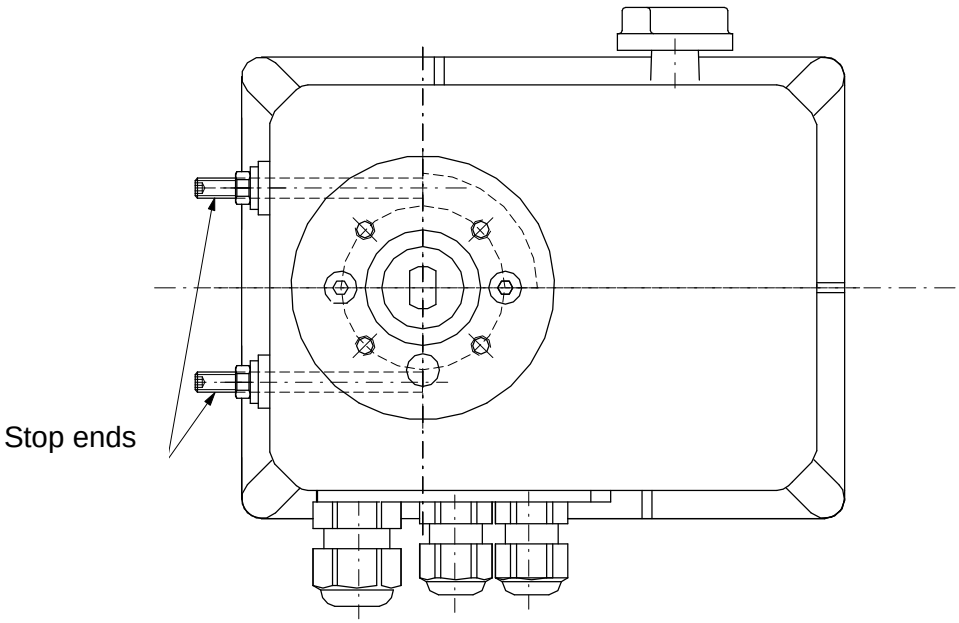

Pic.9: Flange of actuator from bottom.

Attention!

Operating angle adjusted by stop ends must be greater than angle adjusted by switches S3 and S4. Fixed stop ends are used only for localisation of a position by manual adjusting of the actuator. Use of fixed stop ends in motor-operated operation of actuator is <u>impermissible</u>!

4. Service, maintenance and troubleshooting

4.1 Service

1. In general it is provided that service of the EA is performed by a qualified worker in accordance with requirement given in Chapter 1!
2. After putting the EA into operation it is needed to verify whether during manipulation any scratch on surface occurred, it is to be removed to prevent actuator against corrosion!

The EA SP/SPR requires just negligible service. Proper putting into operation is a recondition of reliable operation.

The service of the EA leads from the operation conditions and usually resides in information processing for further arranging of required functions.

The stuff has to perform prescribed maintenance to prevent the EA during operation against impacts of environment, which exceed the frame of allowed influences.

While mains failure the actuator stops in the position where it was before the failure. If needed the actuator can be reset with the handwheel (if it is equipped with the mechanism for gear disengagement).

Manual control:

If needed (during adjusting, function checking, failure etc.) the stuff can change setting of the controlled body using the handwheel.

Instructions for manual control:

- Switch the power supply off.
- Turn the button for gear disengagement to the right by 90° (Fig. 10), the button arrow shows the symbol of hand) what disengages the gear in the actuator. In case of lever actuator it is needed to hold the lever to prevent the device with load against stroke to the end position.
- Set the actuator to the chosen position:

a) *For actuators with manual control:* push and turn the hand wheel located on the actuator upper cover. While turning counter-clockwisely the valve is turning in the direction "closing". Having the valve in the required position turn the button for gear disengagement to the position "motored operation" what engages the gears. Put the hand wheel back to its original position.
b) *For actuators without manual control* of the version with a stand and lever - using the lever. After resetting of the valve put the gear disengagement button to the original position.

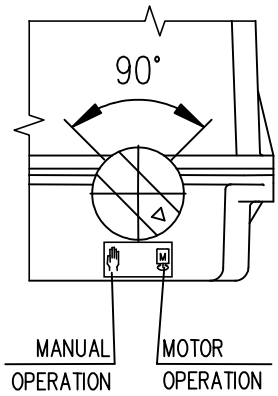

Fig.10

Note:
After putting the button for disengaging of gearing again to the position of motor operation if the gearing is not connected it is needed to turn the handwheel or the lever to put the gears into mesh.

In case of manual control the set end positions are not mistuned.
Actuators without gear disengagement cannot be manually controlled.

4.2 Maintenance - extent and periodicity

During inspections and maintenance is needed to tighten all screws and nuts that affect the tightness and coverage. Similarly, once a year should be checked and if necessary tighten mounting screws of the terminal wires and assuring of the slip-on joints with wires.

The interval between two preventive inspections is four years.
The replacement of cover gaskets and gasket of an oil filling is needed in case of damage or after 6 years of the operation.

The grease in the supplied actuators is designed for the lifetime of the product.
It is not necessary to change the grease during the operation of the actuator.

Lubrication:

- - gear part - grease HF 401/0 (GLEIT-μ) resp. GLEITMO 585 K

Lubrication of the valve stem is independent on maintenance of the EA!

After every potential flooding of the product check, whether there is no water inside. After eventual water penetration, dry the product before repeated putting into operation and replace damaged sealings, resp. other parts of EA. identically check also tightness of cable bushings and replace them, if they are damaged.

- Every six months it is recommended to perform one check move in frame of adjusted operation stroke to verify reliability of functioning with setting back to the original position.
- If the audit rules do not determine else the inspection of EA is performed ones a year and tightening of all connecting and grounded screws have to be checked to avoid overheating.
- After 6 months from putting of EA into operation and once a year it is recommended to check tightening of fixing screws between the EA and the valve. (Tighten the screws with the cross system.)

- While connecting and disconnecting of the EA check the tightness of cable glands – those with damaged sealings should be replaced by new ones of the approved type!
- Keep the EA clean and take care about removing impurities and dust. The cleaning has to be performed regularly according to the operation possibilities and requirements.

4.3 Troubleshooting

At failure of power supply the EA stops in the position where it was before the failure. If needed the EA can be set only with the manual control (the handwheel). After restoration of power the EA is prepared for operation.

In case of failure of any element of the EA it can be changed by a new one. Entrust the change to a service centre.

In case of an EA failure, which cannot be eliminated directly in operation, follow instructions for under-guaranty and after-guaranty service.

For regulator repair a F1,6 A subminiature fuse for PCB should be used, alternativelly also F 2A, 250 V e.g. Siba type 164 050.1,6 or MSF 250, and for DB .... voltage source repair a M160 mA, 250V fuse, e.g. Siba, or MSF 250.

Note:
If the EA requires dismantling follow the chapter "Dismantling".

Taking the EA to pieces for repair purposes is allowed only by professionally qualified persons trained in the production plant or by a contracted service centre!

5. Spare parts

Spare part list:

Spare part	Order Nr.	Position	Figure
Electric motor; 1 W; 230 V AC; 50Hz	63 592 346	58	1
Electric motor; 2,75 W; 230 V AC; 50Hz	63 592 382	58	1
Electric motor; 3,54 W; 230 V AC; 50Hz	63 592 381	58	1
Electric motor, 4,7 W; 230 V AC; 50Hz	63 592 380	58	1
Electric motor; 7,3 W; 230 V AC; 50Hz	63 592 379	58	1
Electric motor; 7,3 W; 110 V AC; 60Hz	63 592 378	58	1
Micro switch CHERRY D3 with roller lever	64 051 738	-	-
Capacitive transmitter CPT 1	64 051 499	10	6
Resistant wire transmitter (potentiometer) RP19; 1x100	64 051 812	57	1
Resistant wire transmitter (potentiometer) RP19; 1x2000	64 051 827	57	1
Resistant wire transmitter (potentiometer) RP19; 2x100	64 051 814	57	1
Resistant wire transmitter (potentiometer) RP19; 2x2000	64 051 825	57	1
Resistant wire transmitter (potentiometer) MUP 1350; 1x100	64 051 821	57	1
Resistant wire transmitter (potentiometer) MUP 1350; 1x2000	64 051 824	57	1
Resistant wire transmitter (potentiometer) MUP 1350; 2x100	64 051 820	57	1
Resistant wire transmitter (potentiometer) MUP 1350; 2x2000	64 051 823	57	1
Sealing – IP 65	04 709 000	-	-
Sealing – IP 67	62 732 376	-	-
Cable glands M16	63 456 595	9	1
Cable glands M20	63 456 596	9	1
Terminal board EKL 0 EDS PA	63 456 710	52	1

6. Enclosures

6.1 Wiring diagrams

Wiring diagrams for EA SP 0.1

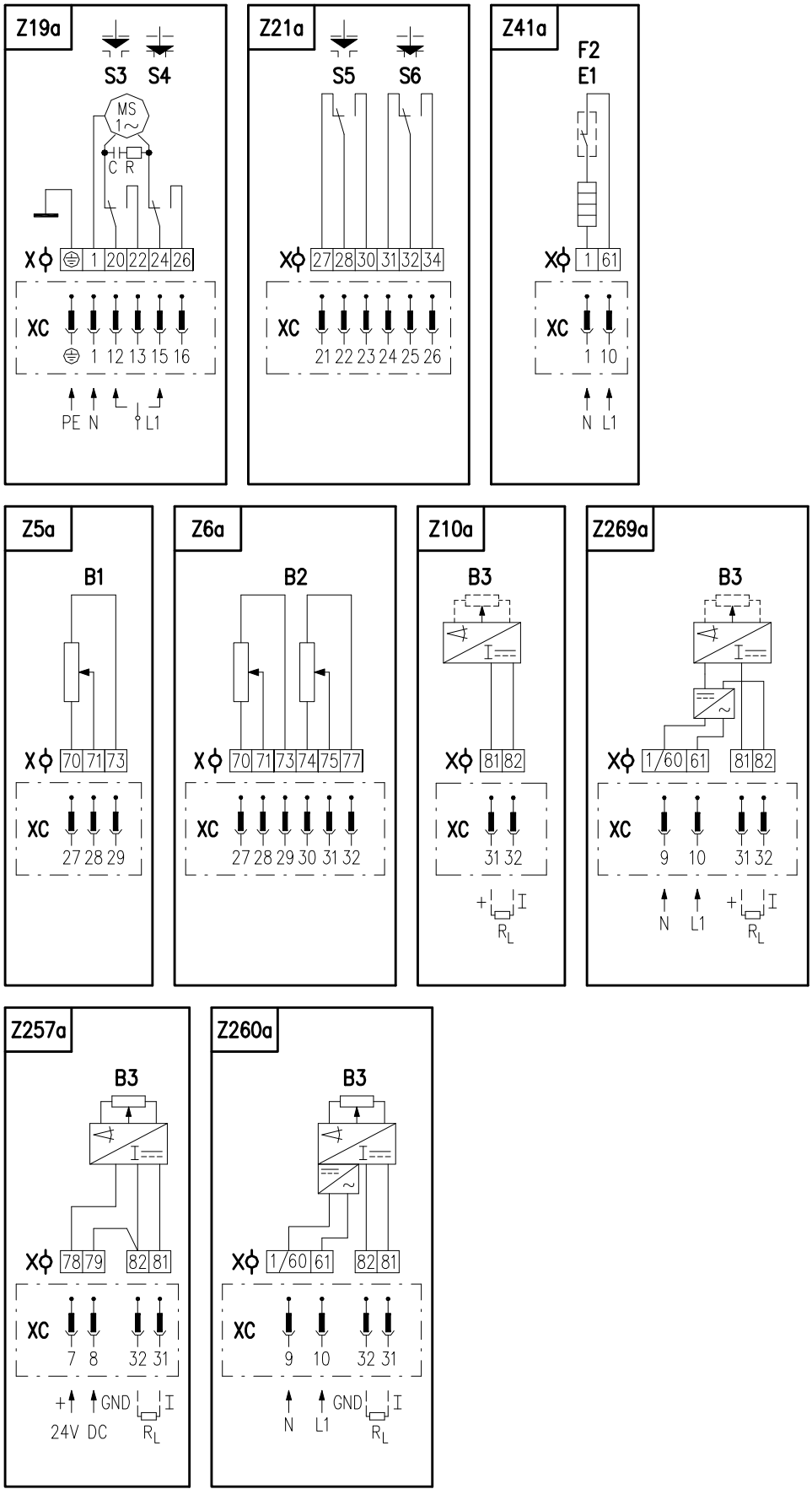

Wiring diagrams for EA SPR 0.1

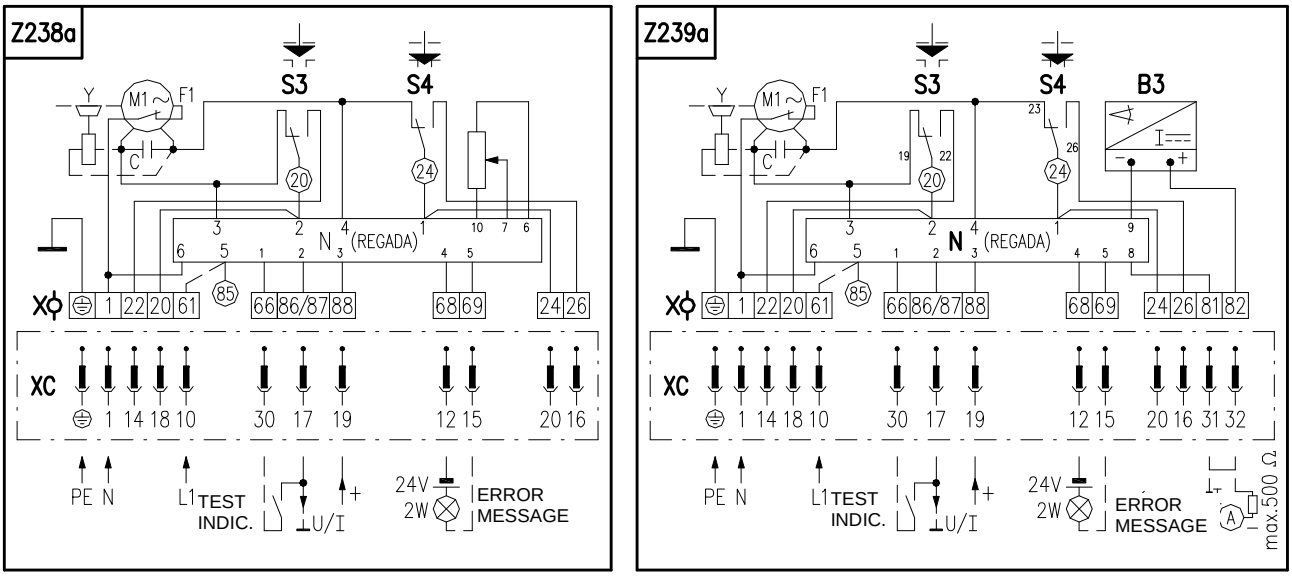

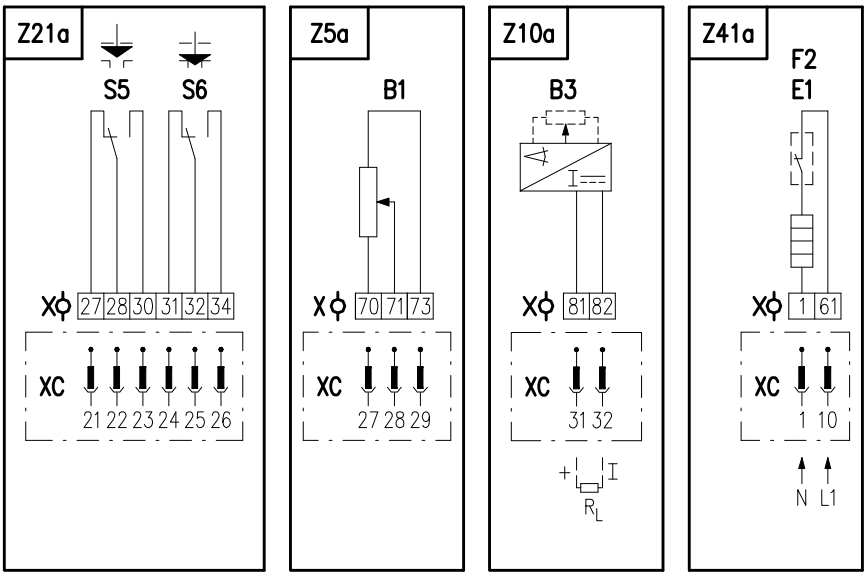

Legend:

Z5a ..... wiring diagram of single resistant transmitter
Z6a ..... wiring diagram of double resistant transmitter
Z10a ..... wiring diagram of resistive with current converter or capacitive transmitter - 2-wire without supply,
Z19a .....electrical motor connection with additional position switches
Z21a ....additional position switches connection
Z41a ....space heater with thermal switch connection
Z238a ...position controller with resistant feedback connection
Z239a ...position controller with current feedback connection
Z257a ...3-wire version of EPV - without power supply connection
Z260a... 3-wire version of EPV - with power supply connection
Z269a ...2-wire version of EPV or capacitive transmitter – with power supply connection

B1..... remote transmitter-resistive, single
B2..... remote transmitter-resistive, double
B3 ..... electronic position transmitter (EPV) or capacitive transmitter
C..... capacitor
E1 ..... space heater
F2 ..... space heater's thermal switch
F3..... fuse controller
I(U) ..... output current or voltage signals
M1..... electric motor

MS ..... synchronous electric motor
N..... controller
R ..... resistor
R_L ..... loop resistance (load resistance)
S3 ..... positional switch "open"
S4 ..... positional switch "closed"
S5 ..... additional positional switch "open"
S6 ..... additional positional switch "closed"
X ..... terminal board
XC ..... connector

Notes:
1. In case that the output signal of the capacitive transmitter (wiring diagram Z239a) is not used (the loop between terminals 81 and 82 is open) the terminals 81 and 82 are to be connected with a jumper (the jumper is placed in the plant). If the output current signal is to be used, the jumper is required to be removed.
2. For the EA version with supply voltage of 24 V AC an earthling cable PE is no necessary to be connected.
3. With the version with controller when the feedback from the CPT transmitter is used; at using the output t signal, this signal isn't galvanic insulated from the input signal !
4. In case that galvanically separated output signal is needed it is necessary to use galvanical separation element (is not part of delivery), e.g. NMLSG.U07/B (producer SAMO Automation s.r.o.). After discussion this module could be supplied by EA producer.

6.2 Dimensional drawings

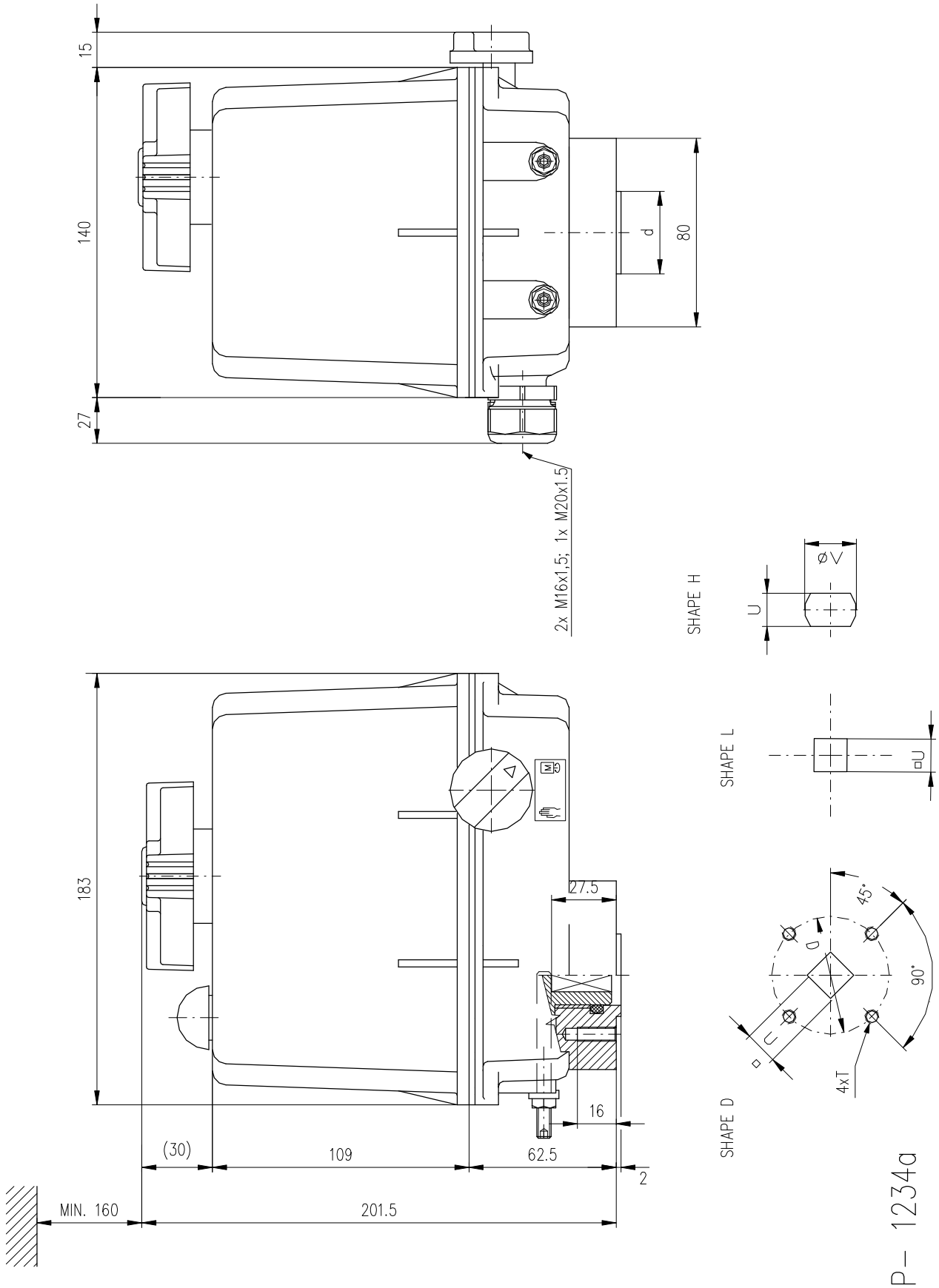

SHAPE SL

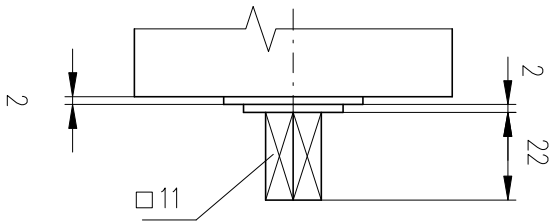

SHAPE SV

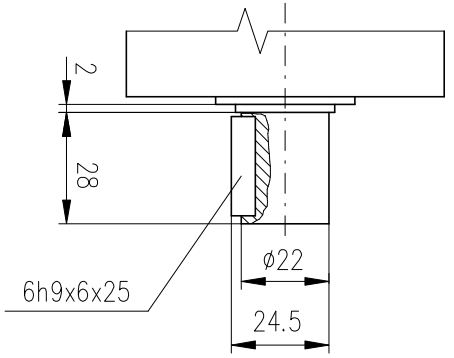

F 05	ø50	ø35	M6	14	18 $^{0}_{-0,4}$	D,L,H,SV
F 05	ø50	ø35	M6	11	–	D,L,SL
F 04	ø42	ø30	M5	8	13	H
F 04	ø42	ø30	M5	11	18	D, L, H, SL, SV
F 03	ø36	ø25	M5	9	14	D, H, SL
FLANGE SIZE	D	d	T	U	V	COUPLING SHAPE

P– 1234a – continuation

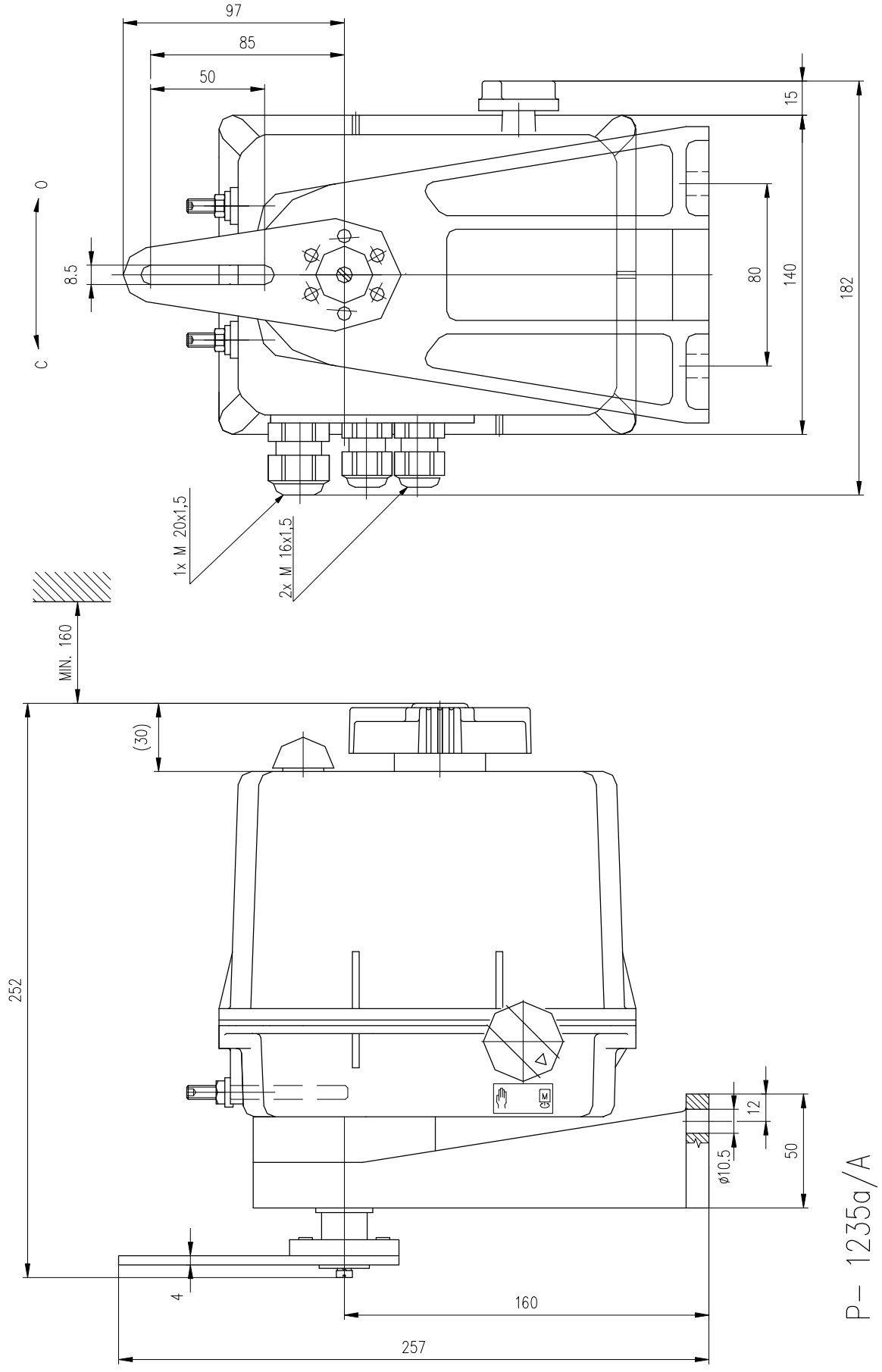
97
85
50
15
0
C
8.5
80
140
182
1x M 20x1,5
2x M 16x1,5
MIN. 160
(30)
252
12
ø10.5
50
4
160
257
P– 1235a/A

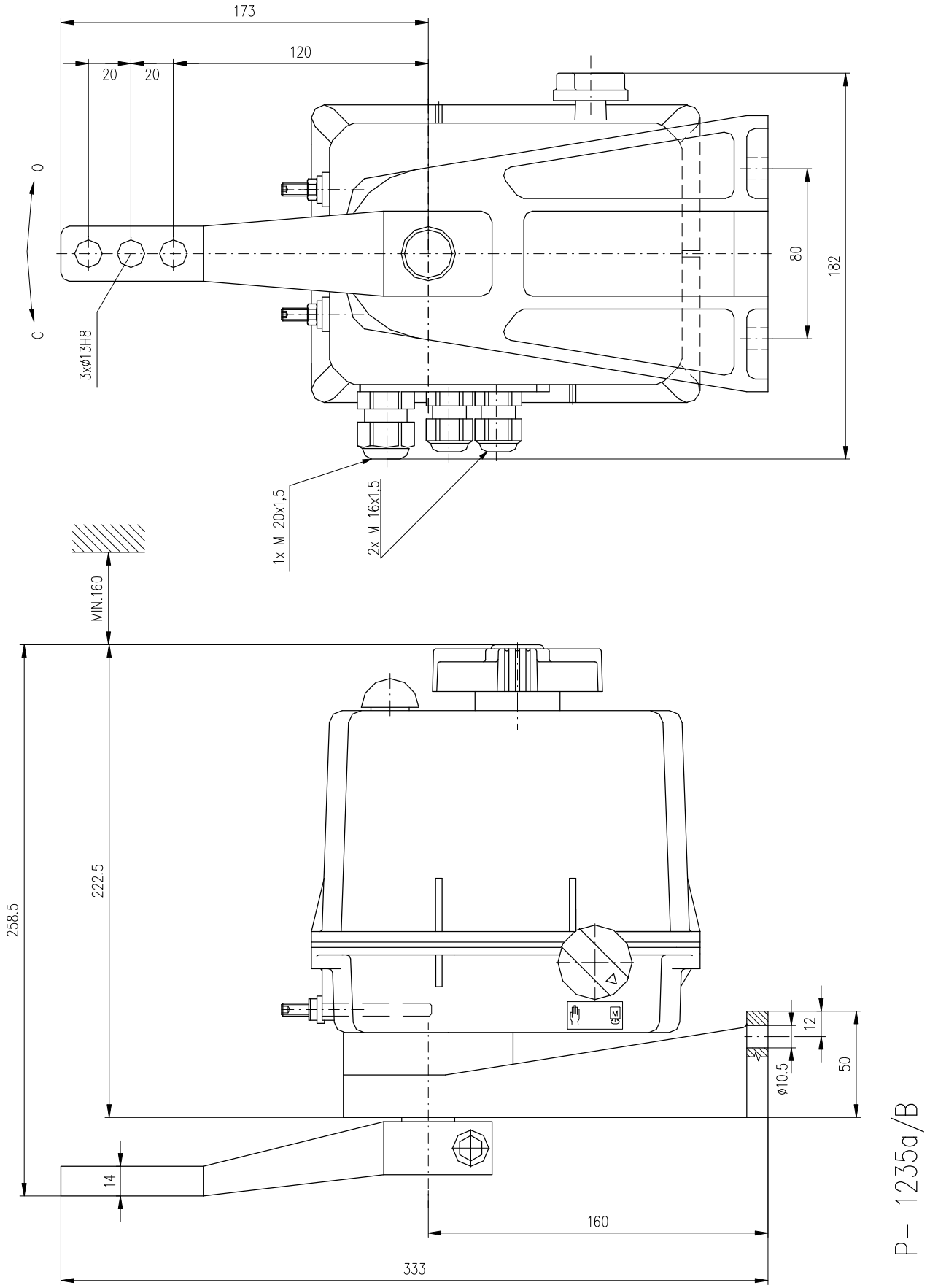
173
120
20
20
0
C
3xø13H8
80
182
1x M 20x1,5
2x M 16x1,5
MIN.160
258.5
222.5
14
160
333
12
ø10.5
50
P– 1235a/B

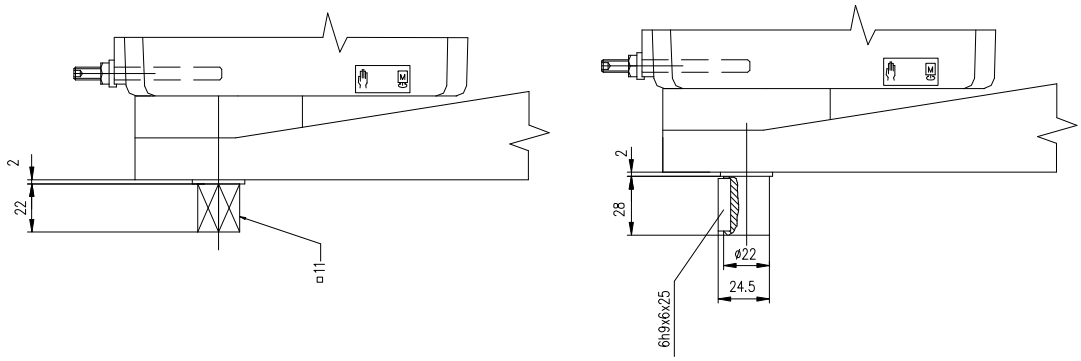
2
22
□11
2
28
ø22
24.5
6h9x6x25

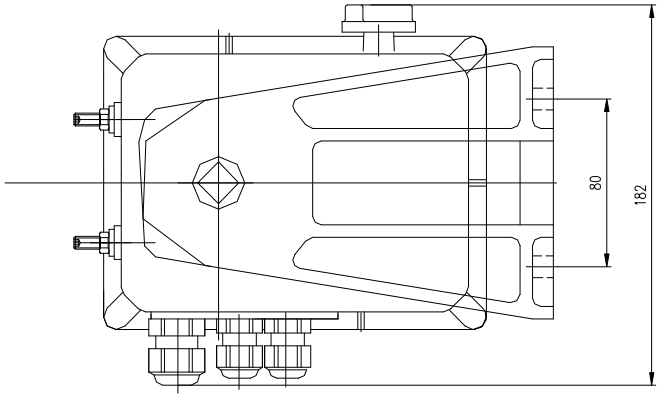
80
182

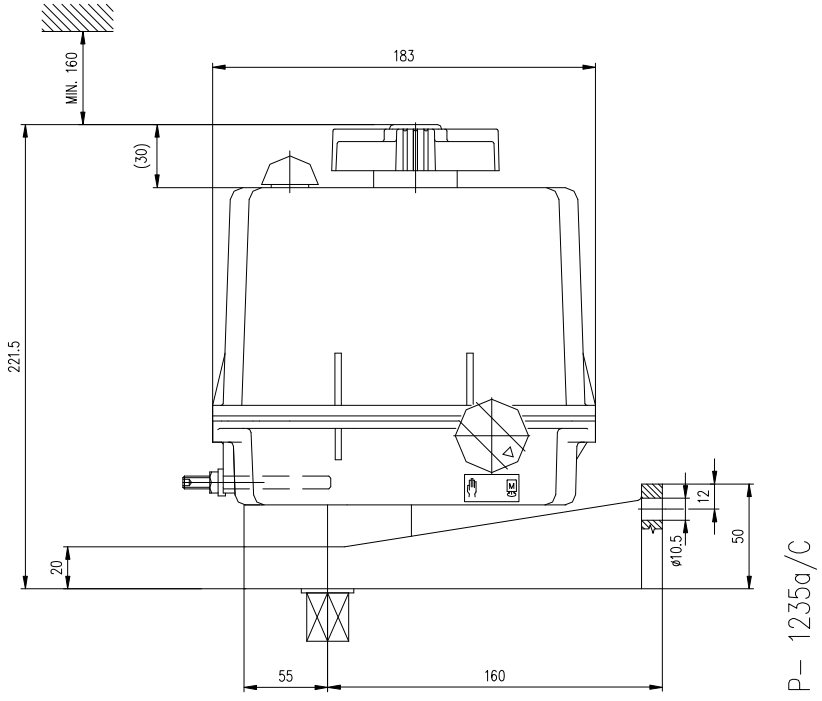
MIN. 160
183
(30)
221.5
20
12
50
ø10.5
55
160

P– 1235a/C

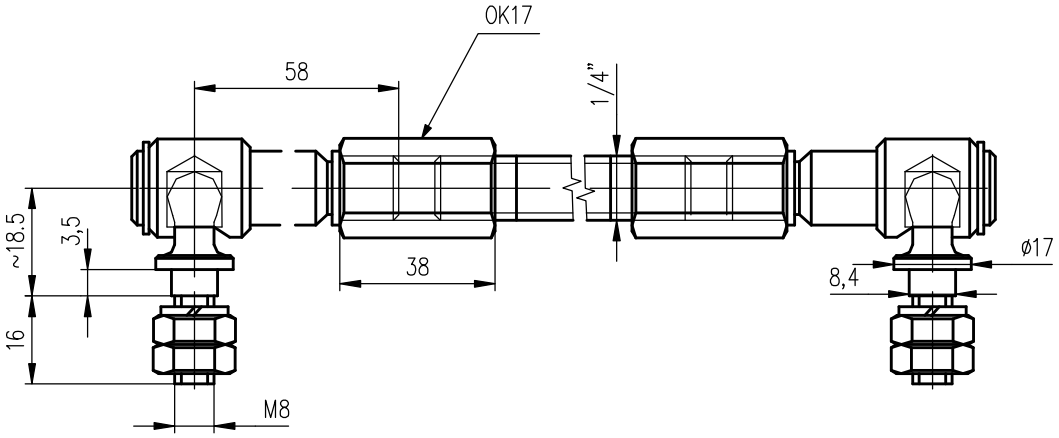
OK17
58
1/4"
~18.5
3,5
16
38
8,4
ø17
M8

P–0100

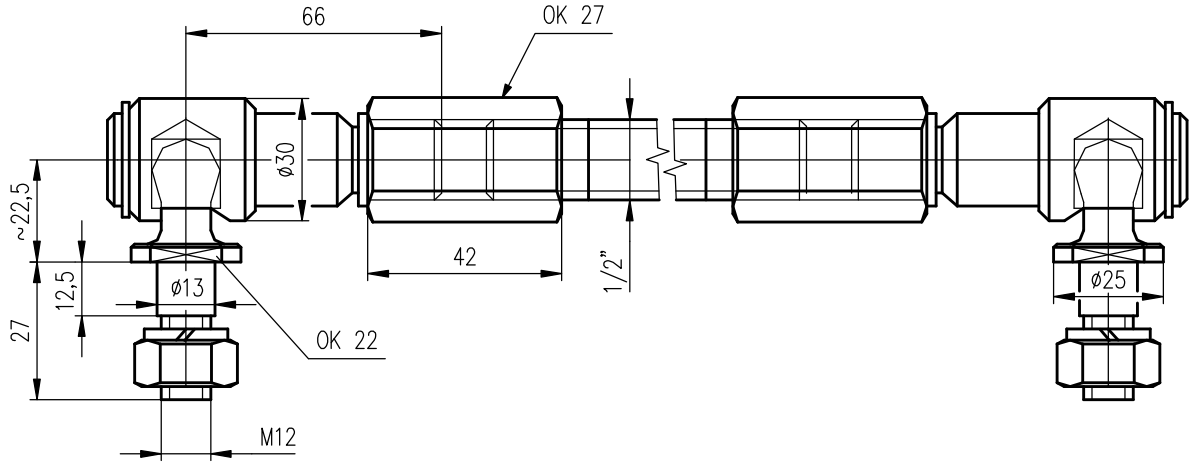
66
OK 27
ø30
~22,5
27
12,5
ø13
42
1/2"
ø25
OK 22
M12

P–0210

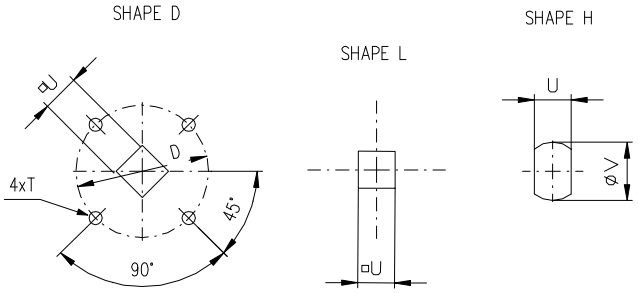

F 07	ø70	ø8,5	14	–	L–14
F 07	ø70	ø8,5	14	$18^{\ 0}_{-0,4}$	H–14
F 07	ø70	ø8,5	14	–	D–14
F 07	ø70	ø8,5	8	13	H–8
FLANGE SIZE	D	T	U	V	COUPLING SHAPE

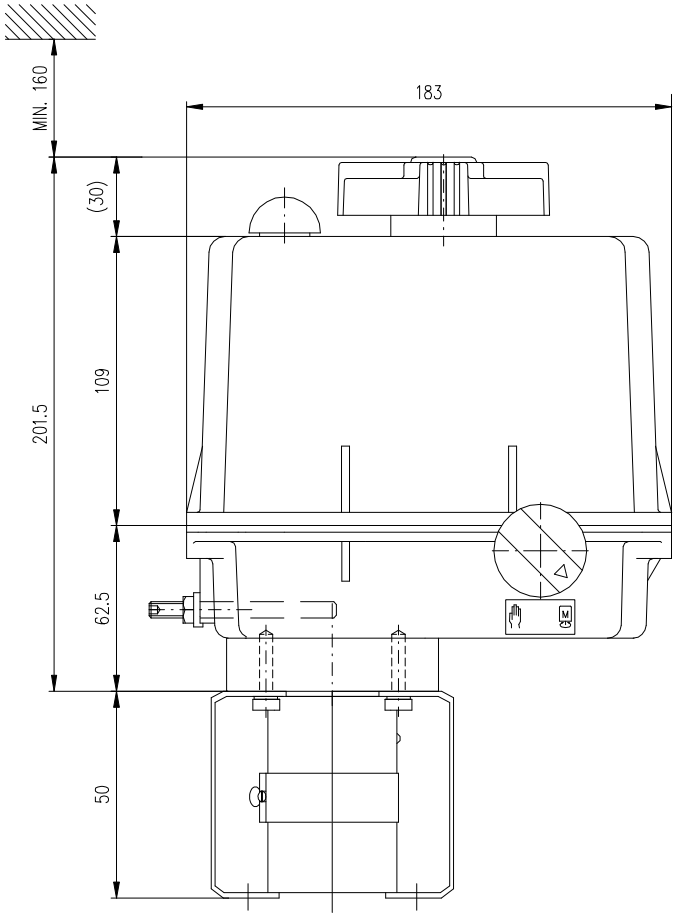

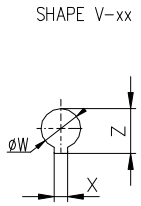

F 07	20	6	22.5	V–20
F 07	16	5	18.1	V–16
F 07	12	4	13.6	V–12
FLANGE SIZE	W	X	Z	COUPLING SHAPE

P– 1493