ZPA PEČKY, a.s.

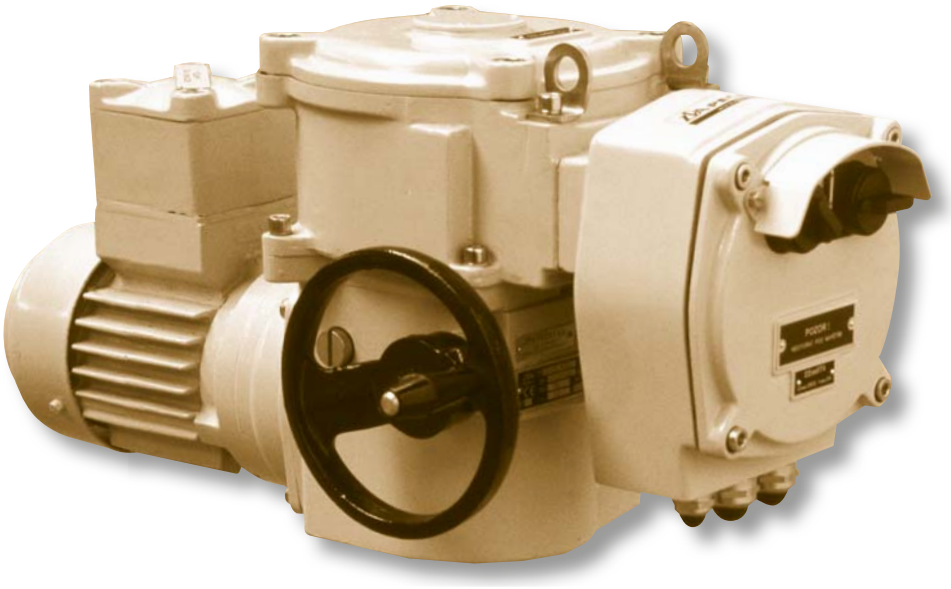

MOUNTING AND OPERATING INSTRUCTIONS

Electric rotary multi-turn actuators
Explosion-proof design

MODACT MO EEx

Type numbers 52 120 - 51 125

CERTIFICATE

TÜV NORD

Management system as per
EN ISO 9001 : 2008

In accordance with TÜV NORD CERT procedures, it is hereby certified that

ZPA Pečky, a.s.
Třída 5. května 166
289 11 Pečky
Czech Republic

with sites acc. to the annex

applies a management system in line with the above standard for the following scope

Development and production of electric actuators, switchboards, production of Roots blowers and sheet metal treatment.

Certificate Registration No. 04 100 950161
Audit Report No. 624 362/400

Valid until 2015-09-24
Initial certification 1995-03-01

Certification Body
at TÜV NORD CERT GmbH

Praha, 2012-09-25

This certification was conducted in accordance with the TÜV NORD CERT auditing and certification procedures and is subject to regular surveillance audits.
The annex (1 page) is the integral part of the certificate.

TÜV NORD CERT GmbH Langemarckstrasse 20 45141 Essen www.tuev-nord-cert.com

IAF

TGA-ZM-07-06-00

The Mounting and Operating Instructions specify basic principles for mounting, connection, adjustment, operation, maintenance, and repairs of electric explosion-proof actuators. A fundamental prerequisite is that assembly, operation, maintenance, and revisions are performed by skilled technicians qualified for operation and works on explosion-proof electric devices and the works are supervised by a professionally qualified expert instructed in a demonstrable way.

1) APPLICATION

The **MODACT MO EEx** electric rotary multi-turn actuators are specially intended for controlling devices by a reversing rotary motion, e.g. slide valves and valves, and, in connection with an appropriate gearbox, also flap or ball valves, and other devices for which they are suitable due to their properties.

They can be operated in an environment with a danger of explosion of explosive gaseous atmosphere in zone 1 and zone 2 according to ČSN EN 60079-10-1. The actuators are designed as a device of group **II,** category **2G** in compliance with standards ČSN EN 60 079-0:2010, ČSN EN 60 079-1:2008 and ČSN EN 60079-7:2007 for explosive gaseous atmosphere.

The actuators **MODACT MO EEx** are available for surrounding temperature from -25 °C to +55 °C.

The actuators **MODACT MO EEx** are available for surrounding temperature from -50 °C to +55 °C *(in the version without position transmitter or with current transmitter CPT 1AF)*. In the type designation, there are letters F *(52 12x.xxxxF)* at the last places of their complementary type number.

The actuators marked

The actuators are marked with protection against explosion and symbols of the group and category of the device Ex **II 2G** and according to version for surrounding temperature from -25 °C to +55 °C with marking **Ex de IIC T4 Gb** *(type No. 52 125 with marking Ex de IIB T4 Gb)* or for surrounding temperature from -50 °C to +55 °C or -60 °C to +55 °C with marking **Ex de IIB T4 Gb** *(see Data on actuators).*

The actuators MODACT MO EEx of mining version

Electric actuators **MODACT MO EEx** can be supplied in mining version marked Ex **I M2 Ex d I Mb.**

Another modification of actuators is design for use in spark-safe control circuits. Certification of **MO EEx** actuators was extended and the actuators defined as simple device according to Art. 5.7 ČSN EN 60079-11 with marking **"I M2 Ex d I Mb ib".**

With their design, the actuators meet basic conditions of the level of **spark safety protection "ib"**. The control part of the circuits *(control of actuators)* and the power part of the circuits *(electric motors)* are separated and each has its own switchboard.

The actuators marked

- label of protection against explosion and symbols of the group and category of the device Ex **II 2G** or Ex **I M2**
- and according to version for surrounding temperature

from -25 °C to +55 °C	with marking **Ex de IIC T4 Gb** *(type No. 52125 marked Ex de IIB T4 Gb)*
from -50 °C to +55 °C or from -60 °C to +55 °C	with marking **Ex de IIB T4 Gb**

- as modification for use in mines in group **I,** category **M2** — with marking **Ex de I Mb**
- as modification for use in spark-safe control circuits in mines group **I,** category **M2** — with marking **Ex ib d I Mb**

Designation of explosion-proof properties

It consists of the following symbols:

Ex Electric device complies with the standard ČSN EN 60 079-0 and related standards for various types of protection against explosion.

d Designation of the type of protection against explosion, explosion-proof closure according to ČSN EN 60 079-1.

e Designation of the type of protection against explosion, secured version according to ČSN EN 60 079-7.

II Designation of the group of explosion-proof electric device according to ČSN EN 60 079-0.

B, C Designation of the sub-group of the group of explosion-proof electric device according to ČSN EN 60 079-0.

T4 Designation of temperature class of explosion-proof electric device of the Group II according to ČSN EN 60 079-0.

Gb Designation of an explosion-proof electric device for explosive gas atmospheres with a “high” level of protection and is not a source of ignition in normal operation or during expected malfunctions, according to ČSN EN 60079-0.

ib Designation of protection of spark safety according to ČSN EN 60 079-11.

Nomenclature

Environment with explosion danger – Environment in which an explosive atmosphere can be created

Explosive gaseous atmosphere – A mixture of flammable substances *(in the form of gases, vapours or mist)* with air under atmospheric conditions in which, after initialization, burning spreads out to non-consumed mixture.

Maximum surface temperature – The highest temperature created during operation under the most unfavourable conditions *(however within approved limits)* on any surface part of the electric device, which could induce ignition of surrounding atmosphere.

Closure – All walls, doors, covers, cable bushings, shafts, rods, pull-rods, etc. which contribute to the type of protection against explosion and/or to the level of protection *(IP)* of the electric device.

Explosion-proof closure “d” – Type of protection in which the parts capable of causing ignition of an explosive atmosphere are installed inside the closure; in case of internal explosion this closure should withstand pressure of the explosion and prevent spreading of the explosion into the surrounding atmosphere.

Secured design “e” – Type of protection against explosion with additional measures adopted for increased safety against non-permissible temperature increase and formation of sparks or arcs inside and on external parts of the electric device which, under normal operating conditions, does not form sparks or arcs.

Spark safety “i” – Type of protection against explosion based on limited electric energy in the device and the interconnecting line that is exposed to an environment with danger of explosion to a level lower than the level that could cause ignition by sparkling or thermal effects.

Spark-safe circuit – A circuit that, under testing conditions prescribed according to standard ČSN EN 60079-11, produces neither sparks nor thermal effects that would be able to cause ignition of a given explosive gaseous atmosphere.

Simple device – An electric component or combination of components of simple design with well defined electric parameters compatible with spark safety of the circuit in which they are used.

Zone 1 – A space where probability of occurrence of an explosive atmosphere of a mixture of flammable substances in the form of gas, vapour or mist with the air is occasional under normal operation.

Zone 2 – A space where occurrence of an explosive gaseous atmosphere formed of a mixture of flammable substances in the form of gas, vapour or mist with the air is improbable under normal operation; however, if this atmosphere is formed it will only persist for a short period of time.

Standards

The following basic standards apply to explosion-proof actuators:

ČSN EN 60079-0	Electrical devices for explosive gaseous atmosphere. General requirements.
ČSN EN 60079-1	Electrical devices for explosive gaseous atmosphere. Explosion-proof closure “d”.
ČSN EN 60079-7	Electrical devices for explosive gaseous atmosphere. Secured version “e”.
ČSN EN 60079-10	Electrical devices for explosive gaseous atmosphere. Specification of dangerous areas.
ČSN EN 60079-14	Regulations for electrical devices in areas with a danger of explosion of flammable gases and vapours.
ČSN IEC 60721	Types of environment for electrical devices.
ČSN 33 0371	Non-explosive mixtures. Classification and testing methods.
ČSN 34 3205	Operation of electric rotating machines and work with them.
ČSN EN 60079-11	Explosive atmospheres – Part 11: Protection of device by spark safety.

Data on actuators

The actuators are fitted with the following plates:

1) Plate with data of non-explosive closures:

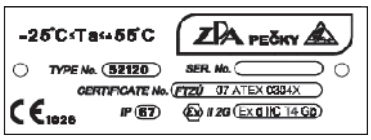

or

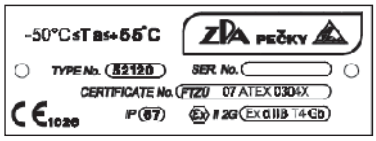

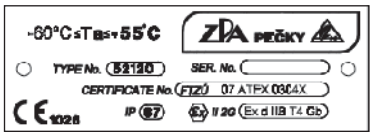

or

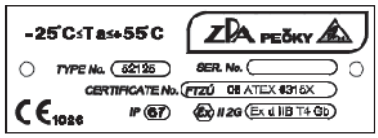

2) Rating and instrument plate contains:
   – manufacture's name and address
   – type designation of product *(type number)*
   – serial number
   – year of production
   – rated value of tripping torgue Nm
   – rated speed of shifting 1/min
   – rated working stroke rev
   – designation of protective enclosure of actuator IP
   – weight of actuator kg
   – mark of conformity CE
   – electrical data of power circuits *(voltage and frequency, current and output of electric motor);*
   – electrical data of control circuit of micro-switches *(voltage, current);*
   – position transmitter *(current)*

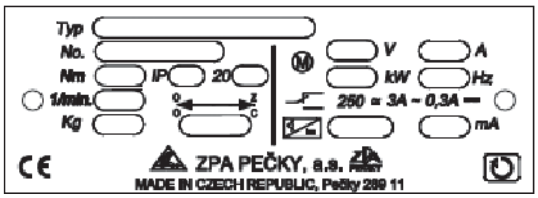

3) Warning plate

4) Plates on covers with marking of used protection against explosion
   a) explosion-proof closure “d” of control box

or

or

   b) secured version “e” of terminal board box
   – without change-over switches of local control

or

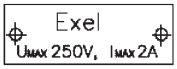

   – with change-over switches of local control

or

or

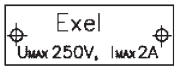

Electric actuators MODACT MO EEx of mining version marked I M2

In an order, the customer shall state that the actuator is intended for using in spark-safe control circuits and, if possible, specify its parameters. Based on this order, the delivered actuator will be fitted with particular anti-condensation heater and marked with the following data.

Plate with data of non-explosive closures;

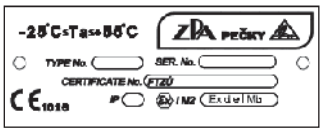

or

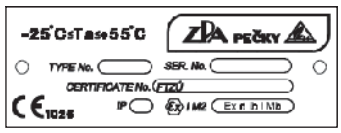

Rating plate

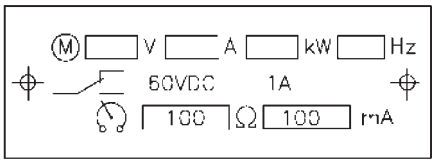

Plate on the cover of the switchboard box with pale blue surface finish.

2) OPERATING CONDITIONS, OPERATING POSITION

Operating conditions

The **MODACT MO EEx** actuators should withstand the effect of operating conditions and external influences, Classes AC1, AD5, AE4, AE5, AF2, AG2, AH2, AK2, AL2, AM-2-2, AN2, AP3, BA4, BC3 a BE3 according to ČSN 33 2000-5-51 ed. 3.

When placed on an open area, the actuator is recommended to be fitted with a light shelter to protect it against direct action of atmospheric effects. The shelter should overhang the actuator contour by at least 10 cm at the height of 20 – 30 cm.

If the actuator is used at a location with an ambient temperature under +10 °C and/or relative humidity above 80 %, at a sheltered location, or in the tropical atmosphere, the anti-condensation heater built-in in all actuators, should always be used. One or two heater elements should be connected, as required.

Installation of the actuators at a location with incombustible and non-conducting dust is only possible if this has no adverse effect on their function. Herewith, the standard ČSN 34 3205 should strictly be adhered to. It is advisable to remove dust whenever its layer becomes about 1 mm thick.

Notes: *A sheltered location is considered a space where atmospheric precipitations are prevented from falling at an angle of up to 60° from the vertical.*

The location of the electric motor should be such that cooling air has free access to the motor and no heated-up blown-out air is drawn in the motor again. For air inlet, the minimum distance from the wall is 40 mm. Therefore, the space in which the motor is located should be sufficiently large, clean and ventilated.

Classes of external influences – as extracted from ČSN Standard 33 2000-5-51 ed. 3.

Class:

1) Surrounding temperature from -25 to +55 °C or from -50 °C to +55 °C or from -60 °C to +55 °C
2) Surrounding temperature identical with point 1) and relative humidity from 10 % to 100 % with condensation
3) AC1 – elevation above sea level ≤ 2000 m
4) AD5 – splashing water in all directions
5) AE5 – small dust content in air; medium layers of dust; daily dust fall out more than 35 mg/m^2, but not exceeding 350 mg/m^2 per day
6) AF2 – occurrence of corrosive or polluting substances from atmosphere Presence of corrosive polluting substances is significant
7) AG2 – medium mechanical stress by impacts – common industrial processes
8) AH2 – medium mechanical stress by vibrations – common industrial processes
9) AK2 – serious risk of growth of vegetation and moulds

10) AL2 – Serious danger of occurance of animals *(insects, birds, small animals)*
11) AM2 – harmful effects of escaping stray currents
12) AN2 – medium sun radiation. Intensity from 500 to 700 W/m^2
13) AP3 – medium seismic effects. Acceleration from 300 to 600 Gal
14) BA4 – staff capability. Instructed persons.
15) BC3 – frequent contact of persons with earth potential. Persons often touch foreign conductive parts or stand on conductive base.
16) BE3N2 – danger of explosion of combustible gases and vapours. ČSN 33 2320 – ZONE 1.

Operating position

Working position of actuators **MODACT® MO EEx** actuators with plastic lubricant – any position.

The actuators with plastic lubricant are labelled *"Filled: solid grease"* on the power box at the side of the hand-wheel.

Actuators with oil charge – position limited only by slope of electric motor axis – max. 15° under the horizontal level. In this way, reducing of service life of rubber sealing of the electric motor shaft by possible fragments or impurities from the oil filling is prevented.

When the actuator is assembled with the electric motor above the horizontal plane the oil filling should be topped up so that reliable lubrication of the motor pinion is ensured.

The actuators with oil filling are not labeled.

3) OPERATION MODE, SERVICE LIFE OF ACTUATORS

Operation mode

According to ČSN EN 60 034-1, the electric actuators can be operated in the S2 load category. The run time at temperature +50 °C is 10 min, the mean load torque is max. 60 % of the value of the maximum tripping torque M_V.

According to ČSN EN 60 034-1, the electric actuators can also be operated in S4 load category *(interrupted operation with starting-up).* The load factor N/N+R is max. 25 %; the longest operating cycle N+R is 10 min *(the course of load is shown in the picture).*The maximum number of switching actions in automatic control mode is 1200 h^{-1}. The mean load torque with load factor 25 % and ambient temperature of 50 °C shall not exceed 40 % of the maximum tripping torque M_V.

The highest mean load torque is equal to rated torque of the actuator.

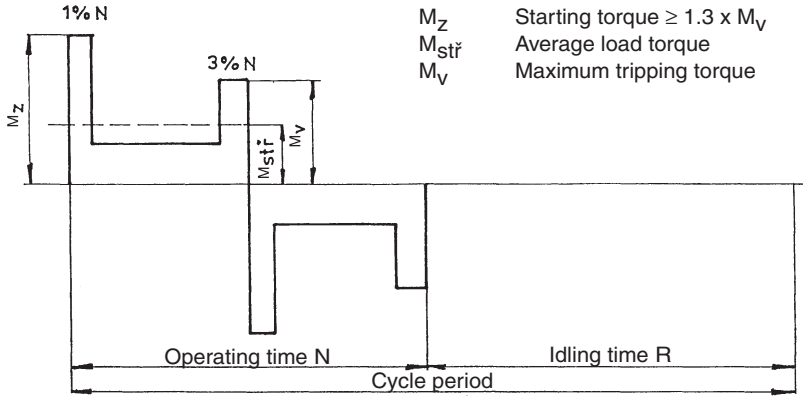

M_Z Starting torque ≥ 1.3 x M_V
$M_{stř}$ Average load torque
M_V Maximum tripping torque

Course of operating cycle

Service life

The actuator intended for shut-off valves must be able to perform at least 10,000 operating cycles *(C - O - C).*

The actuator intended for regulating purposes must be able to perform at least 1 million cycles with operation time *(during which the output shaft is moving)* at least 250 hours. Service life in operating hours *(h)* depends on load and number of switching. Not always, high frequency of switching influences positively accuracy of regulation. For attaining the longest possible faultless period and service life, frequency of switching is recommended to be set to the lowest number of switching necessary for the given process. Orientation data of service life derived from the set regulation parameters are shown in the following table.

Service life of actuators for 1 million starts

Service life [h]	830	1 000	2 000	4 000
Number of starts [1/h]	Max. number of starts 1200	1 000	500	250

4) TECHNICAL DATA

Supply voltage

The actuators **MODACT MO EEx** have been designed to operate at supply voltage of 3 AC 380 to 690 V, ±10 %, 50 Hz, ±2 %.

Within this supply voltage range, all parameters are kept up except the starting torque which varies with the square of the supply voltage deviation from the rated value. This dependence is directly proportional to the supply voltage variation; no larger supply voltage and frequency fluctuations are permitted.

Other supply voltage for electric actuators should be discussed with the manufacturer.

Protective enclosure

The type of protective enclosure **MODACT MO EEx** is IP 55, according to ČSN EN 60529.

Noise

Level of acoustic pressure A	max. 85 dB *(A)*
Level of acoustic output A	max. 95 dB *(A)*

Tripping torque

At the factory, the tripping torque has been adjusted as shown in Table 1 or 2, according to the customer's requirements. If no tripping torque adjustment has been specified by the customer the maximum tripping torque is adjusted.

Starting torque

The starting torque of the actuator is a calculated value determined by the starting torque of the electric motor and the total gear ratio and efficiency of the actuator. After run reversation, the actuator can produce a starting torque for the duration of 1 to 2 revolutions of the output shaft when torque-limit switching is locked. This can take place in either end position or in any intermediate position.

Self-locking

The actuator is self-locking provided that the load is applied only in the opposite direction to the output shaft motion of the actuator. Self-locking is provided by an arresting roller that stops the electric motor even in the manual control mode.

For safety reasons, it is strictly prohibited to use the actuators for driving lifting appliances that may be used for the transport of persons or equipment in cases where people might be present under the lifted load.

Sense of rotation

When looking at the output shaft in the direction towards the control box, the CLOSE direction of rotation is identical with the clockwise sense.

Working stroke

The ranges of working stroke are given in Table No. 1 or No. 2.

Rising spindle

In the design variants with connecting dimensions, Shapes A and C, the actuators can be adapted for mounting to the valve with a rising spindle that projects over the upper end of the actuator output shaft in the end position of the valve. The space reserved for the rising spindle is clearly shown in the dimensional sketches. The user should mount a cylindrical guard of the rising spindle instead of the port cover at the control box top, if required. This guard has not been included in the delivery of the actuator.

Manual control

Manual control is performed directly by a handwheel *(without clutch).* It can be used even when the electric motor is running *(the resulting motion of the output shaft is determined by the function of the differential gear).* When the handwheel is rotated clockwise the output shaft of the actuator also rotates clockwise *(when looking at the shaft towards the control box).* On condition that the valve nut is provided with left-hand thread, the actuator closes the valve.

Torque-limit switches in the actuator are set and work when the actuator is under voltage.

When using the manual control, ie. actuator is controlled mechanically, the torque-limit switches doesn´t work and the valve can be damaged.

5) ACTUATOR OUTFIT

Torque-limit switches

The actuator is fitted with two torque-limit switches *(MO – OPEN, MZ – CLOSE)* each of which acts only in one direction of motion of the actuator output shaft. The torque-limit switches can be set to operate at any point of the working stroke except the region in which they are locked *(see Starting torque).*

The tripping torque can be adjusted within the range shown in Table 1 or 2. The torque-limit switches are locked if the load torque is lost after they have been brought into the OFF-position. This feature secures the actuator against the so-called “pumping”.

Position-limit switches

The PO – OPEN and PZ – CLOSE position-limit switches limit the actuator working stroke, each being adjusted to operate in either end position.

Position signalling

For signalling position of the actuator output shaft, two signalling switches, i.e. the SO – OPEN signalling switch and the SZ – CLOSE signalling switch, are used. Each of these switches acts only in one direction of output shaft rotation. The operating point of the microswitches can be set within the whole working stroke range except the narrow band before the operating point of the microswitch used to switch off the electric motor.

Position transmitters

The **MODACT MO EEx** electric actuators can be supplied without position transmitter or can be fitted with position transmitter:

a) Resistance transmitter 1 x 100 Ω.

Technical parameters:

Position scanning	resistance
Turning angle	0° – 160°
Non-linearity	≤ 1 %
Transition resistance	max. 1.4 Ω
Permitted voltage	50 V DC
Maximum current	100 mA

b) Type CPT 1A passive current transmitter. Power supply to the current loop is not a part of the actuator. Recommended feeding voltage is 18 – 28 V DC, at maximum loading resistance of the loop 500 Ω. The current loop should be earthed in one point. Feeding voltage need not be stabilized; however, it must not exceed 30 V or else the transmitter could be damaged.

Range of CPT 1A is set by a potentiometer on the transmitter body and its starting value by corresponding partial turning of the transmitter.

Technical parameters of CPT 1A:

Scanning of position		capacity
Working stroke		adjustable 0° – 40° to 0° – 120°
Non-linearity		≤ 1 %
Non-linearity, including gears		≤ 2.5 % *(for a maximum stroke of 120°)*
Hysteresis, including gears		≤ 5 % *(for a maximum stroke of 120°)*
(*The non-linearity and hysteresis are related to a signal value of 20 mA*).		
Loading resistance		0 – 500 Ω
Output signal		4 – 20 mA or 20 – 4 mA
Supply voltage	for R_{load} = 0 – 100 Ω	10 to 20 V DC
	for R_{load} = 400 – 500 Ω	18 to 28 V DC
Maximum supply voltage ripple		5 %
Maximum transmitter power demand		560 mW
Insulation resistance		20 MΩ at 50 V DC
Insulation strength		50 V DC
Operational environment temperature		-25 °C to +60 °C
Operational environment temperature – extended range		-25 °C to +70 °C *(additional on demand)*
Dimensions		ø 40 x 25 mm

For the transmitter CPT 1A a two-wire connection is used, i.e., the transmitter, the power supply and the load are connected in series. The user should secure that the two-wire circuit of the current transmitter is connected to the electric earth of the associated regulator, computer, etc. This connection should only be made at a single point in any section of the circuit, outside the actuator.

Anti-condensation heater

The actuators are fitted with an anti-condensation heater preventing condensation of water vapour. It is connected to the AC mains of voltage 230 V.

Local control

Local control serves for controlling the actuator from the site of its installation. It includes two change-over switches: one with positions “Remote control - Off - Local control”, the other “Open - Stop - Close”.

The former change-over switch can be built-in as two-pole or four-pole. The change-over switches are installed in a terminal-board box and the control elements on the lid of this terminal-board box.

6) ELECTRIC PARAMETERS

External electric connection

The electric actuator is equipped with a terminal board for connection to external circuits. This terminal board uses screw terminals allowing conductors with a maximum cross-section 4 mm^2 to be connected. Access to the terminal board is obtained after removal of the terminal box cover. All control circuits of the electric actuator are brought out to the terminal board. The terminal box is fitted with cable bushings for connecting the electric actuator. The electric motor is fitted with an independent box with a terminal board and a bushing.

When connecting external conductors strip the end to length of 8 mm and to each terminal insert the conductors that the conductor insulation intervene to their metal parts. This will be observed surface and air insulation distances for increased safety “e”.

Actuator internal wiring

The internal wiring diagrams of the **MODACT MO EEx** actuators with terminal designation are shown in this Mounting and operating instructions.

Each actuator is provided with its internal wiring diagram on the inner side of the terminal box. The terminals are marked on a self-adhesive label attached to a carrying strip under the terminal block.

Current rating and maximum voltage of microswitches

Maximum voltage of mikroswitches is 250 V AC as well as DC, at these maximum levels of currents.

MO, MZ	250 V AC / 2 A; 250 V DC / 0,2 A
SO, SZ	250 V AC / 2 A; 250 V DC / 0,2 A
PO, PZ	250 V AC / 2 A; 250 V DC / 0,2 A

The microswitches can only be used as single-circuit devices. Two voltages of different values and phases cannot be connected to the terminals of the same microswitch.

Isolation resistance

Isolation resistance of electric control circuits against the frame and against each other is min. 20 MΩ. After a dump test, isolation resistance of control circuits is min. 2 MΩ. Isolation resistance of the electric motor is min. 1.9 MΩ. See Technical specifications for more details.

Electric strength of electric circuits isolation

Circuit of resistance transmitter		500 V, 50 Hz
Circuit of current transmitter		50 V DC
Circuits of microswitches and anti-condensation heater		1 500 V, 50 Hz
Electric motor	Un = 3 x 230/400 V	1 800 V, 50 Hz

Deviations of basic parameters

Tripping torque	±12 % of the maximum range value
Adjusting speed	-10 % of the maximum range value
	+15 % of the rated value *(in no-load operation)*

Setting of signalling switches	±2.5 % of the maximum range value *(for the ranges, refer to the Mounting instructions).*
Hysteresis of signalling switches	max. 4 % of the maximum range value
Setting of position-limit switches	±25° of the angle of output shaft displacement *(without the influence of running-down)*
Hysteresis of position-limit switches	max. 45° of the angle of output shaft displacement

Protection

For protection against electric shock to ČSN 33 2000-4-41 the actuators are provided with an internal protective terminal in addition to an protective terminal, according to ČSN 18 6330. The electric motor is also fitted with a protective terminal. The protective terminals are provided with a mark, according to ČSN EN 60417-1 and 2 *(013 760).*

If isn´t the actuator equipped with overcurrent protection when purchased is needed to ensure that the protection is secured externally.

Electric actuators MODACT MO EEx of mining version I M2 for spark-safe control circuits

The actuator ensures the level of protection of spark safety "ib" as a simple device according to ČSN EN 60079-11. Individual circuits of the actuator can be connected to various spark-safe circuits. However, no other than spark-safe circuits may be connected.

The electric motor has its own separate switchboard. The electric motor circuit is not spark-safe.

Description of the electric control circuits

Components used

1. Actuator switchboard

The switchboard is formed of certified row terminals MXK4. Conductors of maximum cross-section 4 mm^2 can be connected to the switchboard. The conductors must insulated to metal parts of the terminal so that spark-safe surface and air insulation distances would be observed.

	– rated voltage	400 V AC / DC
	– rated current	27 A
2. Torque micro-switches XGK 12-88-J21	– rated voltage	250 V AC, 60 V DC
	– rated current	26 A
3. Position-limit and signalling micro-switches D 433-B8LA		
	– rated voltage	250 V AC, 60 V DC
	– rated current	6*(2)* A
4. Bushing D41V21x0,75	– rated voltage	300 V
	– maximum constant current	8 A
5. Anti-condensation heater TRA25	– rated loading without cooling plate	12.5 W
	– maximum permitted voltage	550 V AC / DC
	– value of the anti-condensation heater is given by magnitude of control voltage stated by the customer in the order.	

For instance: *for voltage*	*12 V*	*24 V*	*48 V*
Value of anti-condensation heater	*12 Ω*	*56 Ω*	*220 Ω*

6. Position transmitter

The position transmitter is an optional accessory. For spark-safe circuits, resistance transmitter of the following parameters is certified only:

– rated power output	1 W
– acceptable voltage	50 V DC
– maximum current	100 mA
– electric strength	500 V

Actuators intended for using in spark-safe control circuits cannot be fitted with:

– current transmitter of position 4 – 20 mA

– block *(change-over switches)* of local control

Location of components

The switchboard is installed in the switchboard box with protective enclosure IP 67. Other components are installed in the control box of the actuator in the version of firm closure "d". The boxes are separated by certified bushing D41V21 x 0.75 *(thickness of insulation of bushing conductors is 0.5 – 0.6 mm).*

Independent spark-safe circuits and their electric parameters.

Terminals	Connected part	Function	Parameters of spark-safe circuit
10-11	XGK 12-88-J21	torque switch	Ui = 60V, Ii = 1A, Li = 0 mH, Ci = 0 µF
12-13	XGK 12-88-J21	torque switch	Ui = 60V, Ii = 1A, Li = 0 mH, Ci = 0 µF
14-15-16	D 433-B8LA	position-limit switch	Ui = 60V, Ii = 1A, Li = 0 mH, Ci = 0 µF
17-18-19	D 433-B8LA	position-limit switch	Ui = 60V, Ii = 1A, Li = 0 mH, Ci = 0 µF
20-21-22	D 433-B8LA	signalling switch	Ui = 60V, Ii = 1A, Li = 0 mH, Ci = 0 µF
23-24-25	D 433-B8LA	signalling switch	Ui = 60V, Ii = 1A, Li = 0 mH, Ci = 0 µF
50-51-52	resistance transmitter	Position sensor 100 Ω	Pi=1W, Ui = 50V, Ii =100mA, Li=0 mH, Ci=0 µF
60-61	TRA25	Anti-condensation heater	Pi=12,5W, Ui = 60V, Ii = 1A, Li = 0 mH, Ci = 0 µF

7) DESCRIPTION

The electric actuators are designed for direct attachment on the controlled device. The actuators are connected by means of a flange and a clutch according to ČSN 18 6314. The actuator flanges also comply with ISO 5210. The following clutches are available for transmission of the output shaft motion to the valve:

Shape A *(with adapter),* according to ISO 5210 and DIN 3210
Shape B1 *(with adapter),* according to ISO 5210 *(shape B according to DIN 3210)*
Shape B3 *(without adapter),* according to ISO 5210 *(shape E according to DIN 3210)*
Shape D *(without adapter),* according to DIN 3210
Shape C *(without adapter),* according to DIN 3338

The adapters are mounted between the actuator and the valve.

The electric actuator configuration is shown in Fig. 1. The three-phase asynchronous motor 1 drives, via the countershaft gearing 2, the sun gear of the differential gear unit installed in the actuator supporting box *(power gearing)* 3.

In the motor control mode, the crown gear of the planet differential unit is held in fixed position by a self-locking worm gearing. The handwheel 4 connected with the worm allows manual control even when the motor is running. The output hollow shaft is fixedly attached with the planet gear carrier. The output shaft is extended to the control box 5 where all elements of the electric actuator are installed – position-limit, signalling and torque-limit switches, resistance or current position transmitters, and anti-condensation heater. Operation of the position-limit and signalling switches is derived from rotation of the output shaft via special mechanisms.

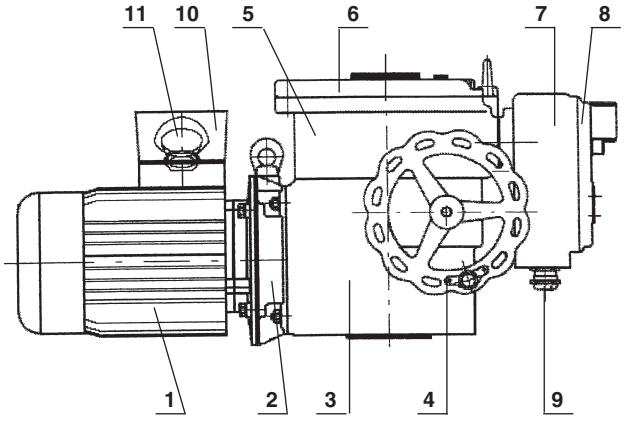

Legend:
1 – Three-phase asynchronous motor
2 – Countershaft gear box
3 – Power gearing
4 – Control handwheel
5 – Control box
6 – Control box cover
7 – Terminal box
8 – Terminal box cover
9 – Cable bushings P 21 (for control)
10 – Terminal board of electric motor
11 – Explosion-proof cable bushing (for motor)

Fig. 1 – ***Electric actuator configuration***

Operation of the torque-limit switches is derived from axial displacement of the “floating worm” of the manual control unit which is scanned and transferred to the control box by means of a lever. The control box forms an explosion-proof closure “d” with designation Ex d IIC T4. The terminal box in the secured design “e” has designation Ex e II T4. The control elements are accessible after removing the cover 6 of this box. Access to the terminal box is possible after removing the cover 8. The cable inlets are protected by certified cable bushings. Three cable bushings are used on terminal board *(see dimensional drawing).*

1 piece M25 x 1,5 *(cable diameter 10 – 16 mm)*
1 piece M25 x 1,5 *(cable diameter 13 – 18 mm)*
1 piece M20 x 1,5 *(cable diameter 7 – 12 mm)*

The following control units are distinguished according to their function:

a) Torque-limit switching unit *(12)*
b) Signalling unit *(13)*
c) Position-limit switching unit *(16)*
d) Potentiometer shifting mechanism *(14)*
e) Position transmitters – resistance 1 x 100 Ω *(15)* or current transmitter CPT 1A *(19)*
f) Anti-condensation heater *(17)*

All the above units are universal for all sizes of the electric actuators **MO EEx.**

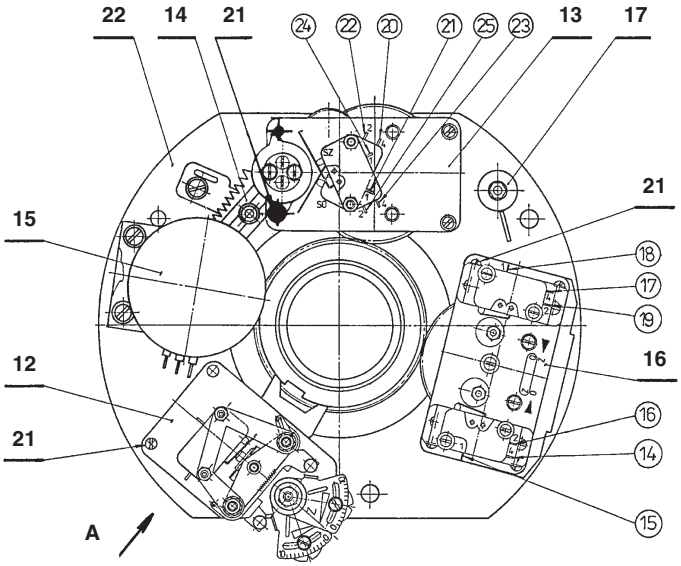

Legend:
12 – Torque-limit switching unit
13 – Signalling unit
14 – Transmitter shifting mechanism
15 – Potentiometer 1 x 100 Ω
16 – Position-limit switching unit
17 – Anti-condensation heater
21 – Fixing screws
22 – Basic control box

The encircled figures correspond to numbers of terminals on the terminal board and apply also to the control board with the current transmitter.

Fig. 2 – ***Control board – Design with potentiometer 1 x 100 Ω***

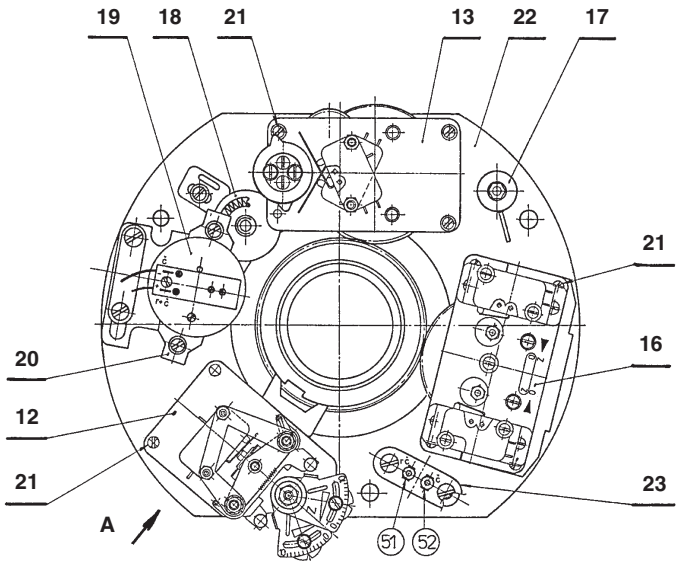

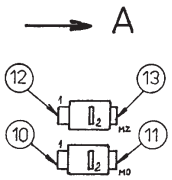

Legend:
12 – Torque-limit switching unit
13 – Signalling unit
16 – Position-limit switching unit
17 – Anti-condensation heater
18 – Driving gear
19 – Current transmitter CPT 1A (4 – 20 mA)
20 – Shim plates
21 – Fixing screws
22 – Basic control box
23 – Holder

For electric actuators type no. 52 120 the supporting plate of the transmitter CPT 1A is turned round by 180 ° against the figure.

Fig. 2a – ***Control board – Design with current transmitter CPT 1A (4 – 20 mA)***

Description and function of control units

a) Torque-limit switching unit *(Fig. 3)*

It is designed as an independent assembly unit and consists of the base plate 24 carrying micro-switches 25; at the same time it acts as bearings for the torque control shaft 27 and the locking shaft 34.

The torque control shaft transmits motion of the floating worm from the power gearing to CLOSE *(MZ)* or OPEN *(MO)* micro-switches by means of segments 28 or 29 and levers 36 or 37. The tripping torque can be set by moving round the segments with respect to the tripping levers. For readjusting the tripping torque outside the factory, the segments 28, 29 are provided with a scale on which the points for setting the maximum and minimum torque are marked as lines individually for each electric actuator. The set torque is indicated by slots in the segments 32 and 33.

However, numbers on this scale do not provide direct indication of the tripping torque setting. The divisions on this scale serve only for finer dividing of the band between the points of maximum and minimum tripping torques and thus for more accurate resetting of the tripping torque outside the factory in case that a loading stand is not available. The segments 28 and 29 are intended for the direction “Close” and “Open”, respectively.

The torque-limit switching unit is also fitted with a locking mechanism which, after opening of the torque-limit switch, provides for its locking. In this way closing of the switch and thus pulsing of the electric actuator is prevented. Moreover, the locking mechanism prevents opening of the torque-limit switch after reversing the electric actuator run and thus enables full utilization of starting torque of the electric actuator. The locking mechanism operates in either direction of motion of the electric actuator output shaft in end positions as well as in intermediate position for the period of 1 – 2 turn of the output shaft after reversing its motion.

With the output shaft of the electric actuator loaded with counteracting torque, the torque control shaft 27 and thus the segments 28 or 29 are moved round. This displacement is transferred to the tripping lever 36 or 37. As the torque on the electric output shaft reaches the value to which the torque-limit switching units has been adjusted, the tripping lever depresses the button of respective micro-switch, the electric actuator is disconnected from the supply mains and the electric actuator stops.

Adjustment of torque-limit switching unit

The tripping torque different from that to which the unit was set in the factory is adjusted as follows: Loosen the lock nut 35 *(Fig. 3)* and particular lock screw 30 *(for direction CLOSE)* or 31 *(for direction OPEN).* Insert a screwdriver into the slot in the upper segment 28 or 29 and rotate the segment until the slot in the segment 32 or 33 tellies with the respective scale division line. This point is determined in such a way that the difference between the maximum and minimum adjustable torques in Nm is divided by the number of the scale divisions between the marks for the maximum and minimum torques. The figure thus obtained indicates value in Nm of the tripping torque corresponding to one scale division. Interpolation is then used for determining the scale division line with which the slot in the segment 32 or 33 should tally.

The colour scale division line nearer to the number 10 indicates the point of setting the maximum tripping torque. The other division line indicates the point of setting the minimum tripping torque. The torque control unit must never be set in such a way that the lower segment slot is outside the band marked out by colour division lines on the scale.

After setting the tripping torque, retighten the lock screw 30 or 31 and the lock nut 35.

The set tripping torque values must not exceed those corresponding to respective type designations in Tables 1 or 2.

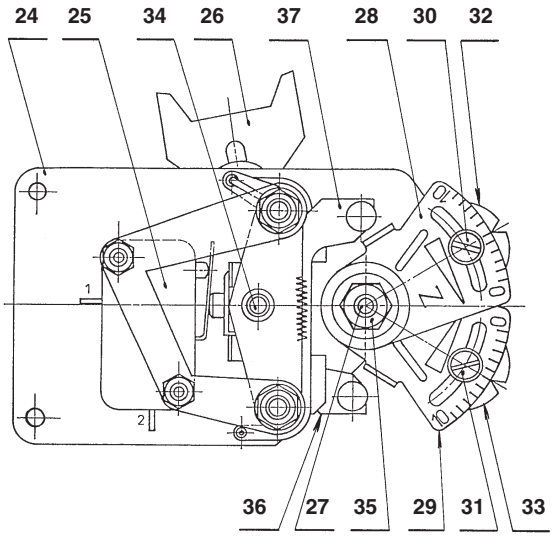

Diagram of micro-switches

Legend:

24 – Base plate
25 – CLOSE and OPEN torque-limit micro-switches
26 – Shifter
27 – Torque control shaft
28 – Upper CLOSE segment
29 – Upper OPEN segment
30 – CLOSE lock screw
31 – OPEN lock screw
32 – Lower CLOSE segment with slot
33 – Lower OPEN segment with slot
34 – Locking shaft
35 – Lock nut
36 – OPEN tripping lever
37 – CLOSE tripping lever

Fig. 3 – ***Torque-limit switching unit***

b) Signalling unit *(Fig. 4)*

This unit transmits electric signal for signalling position of the electric actuator output shaft. The unit is driven by the gear 46 from the output shaft via a multistage gearbox to the cams 38, 39 controlling the OPEN signalling micro-switch 44 and CLOSE signalling micro-switch 45. The moment of operation of the signalling switches can be chosen at any point of the working stroke of the electric actuator except the narrow band around the end positions *(the signalling switch should close earlier than the position-limit switch, while the output shaft is still moving).* The upper cam 38 and the lower cam 39 act in the CLOSE and OPEN direction, respectively.

The signalling unit *(Fig. 4)* is designed as an independent assembly. It is mounted on the supporting plate 47; the gearings fitted under it are arranged as shown in the kinematic diagram *(Fig. 8).* The gearing is assembled so that, after loosening the lock screw 57, the sliding gear K3 can be moved to different levels *(I, II, III, IV, V).* Moving of the gear K3 changes the range of setting the signalling switches and the transmitter according to the electric actuator working stroke. The tables at the Figs. 8 and 9 show the ranges of setting for respective positions of the sliding gear K3**.**

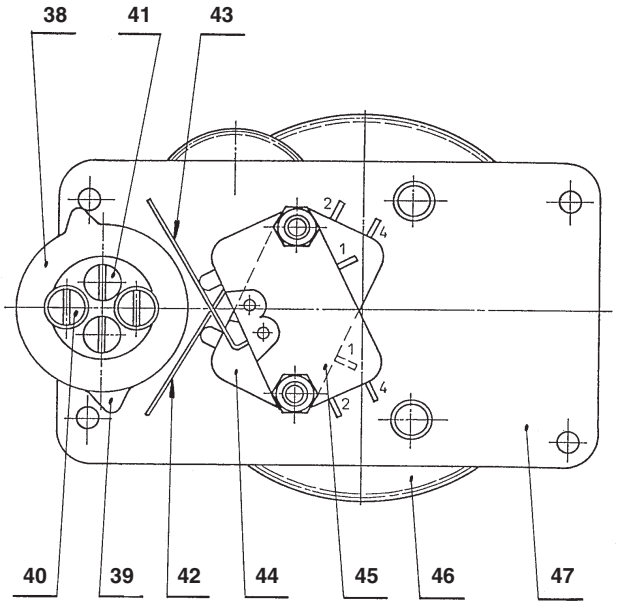

Legend:
38 – CLOSE direction cams
39 – OPEN direction cams
40 – Screws for CLOSE direction cams
41 – Screws for OPEN direction cams
42 – OPEN direction lever
43 – CLOSE direction lever
44 – Micro-switch (lower) for direction OPEN
45 – Micro-switch (upper) for direction CLOSE
46 – Drive gear
47 – Supporting plate of the signalling unit

Diagram of micro-switches

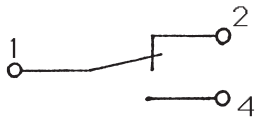

Fig. 4 – ***Signalling unit***

Adjustment of signalling unit

If the ranges of setting the signalling switches and the transmitter are to be modified it is necessary to change the position of the sliding gear K3. In resetting the gear K3 the signalling unit should be partially shifted out from the control box *(length of inlet cables to the micro-switches is sufficient to allow for that).* This can be done after removing three screws 21 *(Fig. 2)* which fix the unit to the base plate. After adjusting the signalling unit to the required range, the unit is returned back. Before the screws 21 are retightened, correct meshing of the gears K1 and K2 should be checked *(Fig. 8).* The pinion 59 *(Fig. 8)* is put on the lower end of the cam shaft 58 *(Fig. 8)* which is connected with the shaft 58 by an adjustable friction clutch. From this pinion the motion is scanned for driving the resistance or current transmitter. Arrangement of the cams and micro-switches of the signalling unit is shown in Fig. 4. The shoulders of the cams 38, 39 deflect the levers 42 or 43 which control the signalling micro-switch OPEN *(44)* or CLOSE *(45).* In adjusting the signalling and position-limit switches and the transmitter it is always necessary to reset the electric actuator output shaft to the position where changing-over of the micro-switches should take place or required position of the transmitter is to be reached.

In adjusting the signalling switches proceed as follows: loosen the screw 40 *(for the CLOSE signalling switch SZ)* or 41 *(for the OPEN signalling switch SO) – Fig. 4).* Then, rotate the cam 38 or 39 in the arrow direction, i.e. in the counter-clockwise sense and clockwise sense for the CLOSE signalling micro-switch and OPEN signalling micro-switch, respectively, until the micro-switch closes. In this position hold the cams and retighten the lock screws.

Caution

After any manipulation with the lock screws in the electric actuator control section, the screws should be secured against loosening during vibrations by a drop of quickly drying varnish. In case these screws were secured with varnish earlier the old varnish should be removed during adjustment and the surface properly degreased.

c) Position-limit switching unit *(Fig. 5)*

This unit ensures tripping of the CLOSE or OPEN position-limit switches on reaching the preset number of turn of the output shaft. Rotary motion of the unit is derived from motion of the output shaft by the driving gear 55. This gear provides for a step-wise turning of the arranged gear wheels controlling the cam 50 *(53).* Turning of the cam against the lever of the CLOSE or OPEN position-limit switch causes changing-over of the switches.

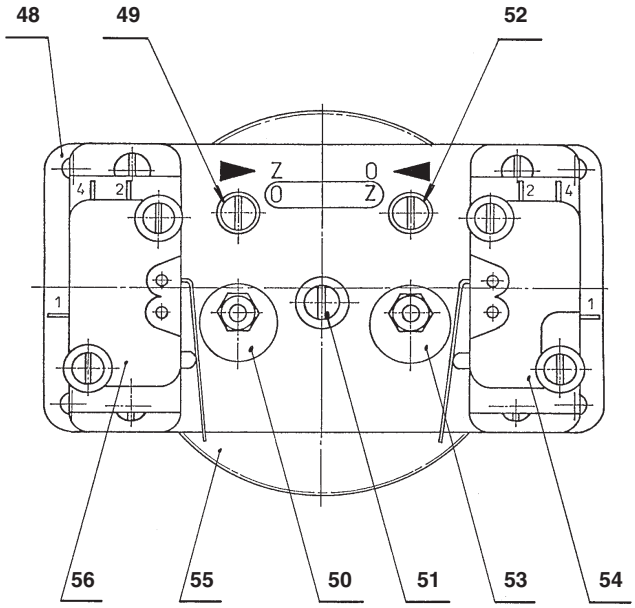

Diagram of micro-switches

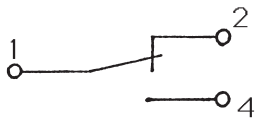

Legend:
48 – Decadic transmission gearing
49 – CLOSE regulating screw
50 – CLOSE tripping cam
51 – Tripping rod
52 – OPEN regulating screw
53 – OPEN tripping cam
54 – OPEN position-limit micro-switch
55 – Driving gear
56 – CLOSE position-limit micro-switch

Fig. 5 – ***Step-wise position-limit switching unit***

Adjustment of position-limit switching unit

The unit can be adjusted within the range according to Tables 1 or 2. The adjusting procedure is as follows:

– After attaching the electric actuator on the valve, bring the valve into the CLOSE position by means of the electric actuator.
– In this position depress the tripping rod 51 in vertical direction and move it round by 90 ° to either side.
– Rotate the regulating screw 49 in the direction of the arrow “Z” *(CLOSE)* until the cam 50 depresses the spring of the CLOSE position-limit micro-switch 56.
– Move the tripping rod 51 round by 90°, the rod is shifted out again. If this is not the case turn the screw 49 or 52 slightly.
– Readjust the valve by means of the electric actuator by a required number of turn into the OPEN position.
– Depress the tripping rod 51 again in the vertical direction and move it round by 90° to either side.
– Rotate the regulating screw 49 in the direction of the arrow “O” *(OPEN)* until the cam 53 depresses the spring of the OPEN position-limit micro-switch 54.
– Move the tripping rod 51 round by 90°, the rod is shifted out again. If this is not the case turn the screw 49 or 52 slightly.

Note:

Turning of the regulating screw 49, 52 should stop at the moment of changing-over!

If, before readjusting, the cams are in the position shown in Fig. 5 or the cam has already depressed the micro-switch button, the following procedure of adjusting is preferred:

After depressing and positioning the tripping rod 51, turn the regulating screws 49 or 51 in the opposite direction of the arrow until the cam top moves out from the micro-switch lever *(in the direction towards the pertaining regulating screw)* and the micro-switch changes over *(this can be checked by a suitable tester).* By turning the regulating screw 49 or 52 in the arrow direction move the cam top back onto the micro-switch lever until the micro-switch changes over again *(the micro-switch button is depressed).* In this way the micro-switch is adjusted. Finally, shift out the tripping rod 51 as described above.

d) Adjusting mechanism of potentiometer *(Fig. 6)*

This mechanism includes two geared rockers 67, 70 on which the spring 72 is suspended. The bar with pins 69 provides for mutual sliding motion of both rockers. The assembly can move round on the pivot 71. The whole

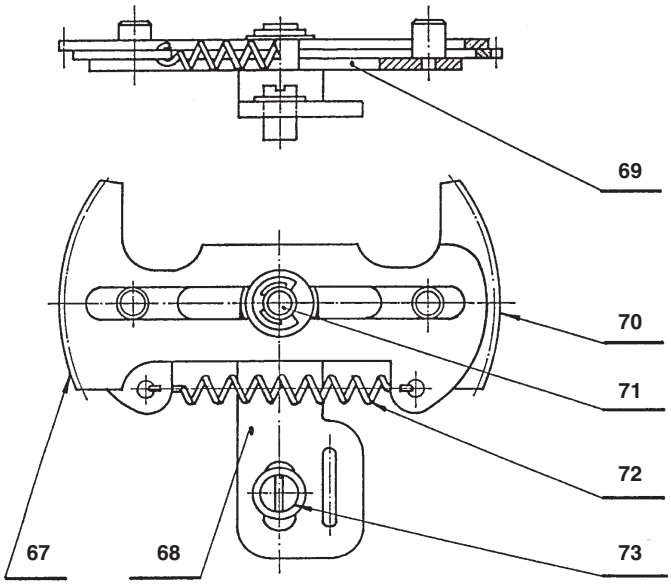

Legend:
67 – Geared rocker
68 – Adjusting lever
69 – Bar with pins
70 – Geared rocker
71 – Adjustable pivot
72 – Spring
73 – Screw

Fig. 6 – ***Adjusting mechanism of potentiometer***

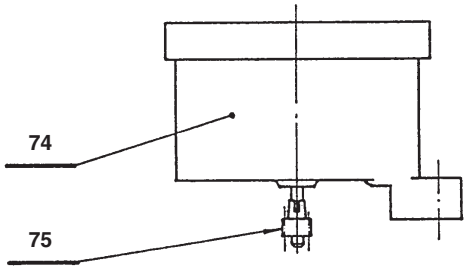

Legend:
74 – Potentiometer
75 – Transmitter pinion

Fig. 7 – ***Potentiometer 1 x 100 Ω***

mechanism is mounted on the basic control plate 22 *(Fig. 2).* The geared rockers are in mesh with the transmitter pinion 75 *(Fig. 7)* and the pinion 59 *(Fig. 8).* Position of the pivot 71 determines the gear ratio of the sliding mechanism gearing, i.e. the angle of positioning of the transmitter and of the local position indicator is always 160 ° for different values of the working stroke of the electric actuator and, thus, for different positions of the cam shaft in the signalling unit. In this way it is ensured that the rated value of the transmitter signal, i.e. 100 Ω, is available for any working stroke.

e) Position transmitters

Basic component of this unit is the potentiometer 74 with the rated value of resistance signal 100 Ω. The transmitter has the shaft brought out on one side. Put on the lower end of the shaft, the pinion 75 can slip on the shaft at both end positions of the transmitter. This is advantageous in adjusting this unit.

Potentiometer *(Fig. 7, 8)* - adjustment

In adjusting the position transmitter proceed as follows: In the CLOSE position of the output shaft shift the geared rocker 67 *(Fig. 8)* out from engagement with the pinion 59 *(Fig. 8)* by pressing it down in the transmitter direction. Turn the rocker in the clockwise direction to the stop formed by a post under the signalling unit. Then, bring the rocker back into engagement with the pinion 59 again. The transmitter pointer should indicate 0°. If this is not the case, move the rocker 67 back from the stop and depress the rocker 70. In this way release the transmitter pinion and set the transmitter indicator near the mark 0° on the transmitter scale so that, after bringing the rocker 70 into engagement with the transmitter pinion, their teeth engage correctly. This can be checked by carefully turning the transmitter shaft. Then, shift the rocker 67 again out of engagement and, applying an excessive force, press it to the stop. The transmitter pinion starts slipping after the transmitter indicator has reached the mark 0°. Bring the rocker 67 again into engagement with the pinion 59 *(Fig. 5).* In this position, the oval holes in the geared rockers are parallel with the oval hole in the basic control plate 22 *(Fig. 2).* Now, the transmitter is adjusted for the position CLOSE. Then, loosen the screw 73 *(Fig. 6),* move the adjusting lever 68 *(Fig. 6)* towards the transmitter up to the stop, and retighten the screw 73.

Bring the electric actuator into the OPEN position with the transmitter pointer set to the position between 0 and 160°. Loosen the screw 73 and rotate the adjusting lever 68 counter-clockwise until the transmitter pointer tallies with the scale line 160°. Retighten the screw 73 and secure it against loosening by a drop of quickly drying varnish. Now, the transmitter is adjusted for the position OPEN.

Adjustment of working stroke - design variant with potentiometer

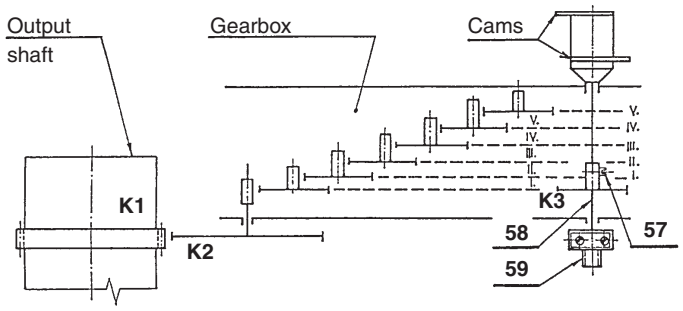

Legend:
K1 – Gear
K2 – Driving gear
K3 – Sliding gear
57 – Lock screw of sliding gear
58 – Cam shaft
59 – Pinion with friction clutch

Fig. 8 – ***Kinematic diagram of gears***

Ranges of adjusting the working stroke

Gear stage	Type number			
	52 120	**52 121** **52 122**	**52 123** **52 124**	**52 125**
I	2 - 2,5	2 - 6,5	2 - 5	2 - 5
II	2,5 - 10,5	6,5 - 22	5 - 17	5 - 17
III	10,5 - 35	22 - 72	17 - 55	17 - 55
IV	35 - 111	72 - 220	55 - 190	55 - 190
V	111 - 250	220 - 250	190 - 240	190 - 240

Note:
For electric actuators, type no. 52 120, position of the sliding gear K3 for respective gear stages is shown on the left, for remaining type nos. on the right.

Current position transmitter CPT 1A *(Fig. 9)* - setting

Before starting setting the current transmitter it is necessary to set the end-limit positions *(torque or position switches)* of the actuator and connect them into the tripping circuit of the electric motor. In case of an external source of feeding voltage, verification must be carried out that it does not exceed the maximum value 30 V DC *(limit value when CPT 1A is still not damaged).* Recommended value is 18 – 28 V DC.

Positive pole of the source is connected to the positive pole of the transmitter CPT 1A; a milli-ammeter of precision at least 0.5 % connected into the circuit. The current loop must be earthed in one point. The figure does not show the earthing that can be made at any point of the circuit.

1. Shift the output shaft into the position Closed. During closing, the current signal value should decrease. If it increases release the transmitter body and, by turning of about 180°, shift to the descending part of the outputcharacteristics. Set 4 mA by fine turning. Tighten the shim plates to secure the transmitter against spontaneousturning.
2. Shift the output shaft to the position Open and set 20 mA using a potentiometer on the transmitter body. The potentiometer has a range of 12 revolutions and it has no stops so that it cannot be damaged by furtherturning.
3. Once again verify the current value in the position Closed. If it has changed too much repeat the points 1. and 2. If the required corrections are large this procedure should be repeated several times. After the setting, secure the transmitter against turning and drip the screws with varnish.
4. Use a voltmeter to check the voltage on the CPT1 terminals. In order to keep linearity of the output signal the voltage must not drop below 9 V, not even with off-take 20 mA. If this condition is not met it is necessary to increase the feeding voltage *(within the range of recommend values)* or to decrease total resistance of the current loop R.

Caution!

The transmitter CPT 1A must not be connected without checking the supply voltage. The transmitter outlet conductors must neither be connected to the electric actuator frame nor to the earth, not even accidentally.

Before the supply voltage is checked, it is first necessary to disconnect the transmitter from the supply mains. Measure the voltage on terminals of the electric actuator to which the transmitter is connected – this can best be done using a digital voltmeter of input resistance at least 1 MΩ. This voltage should fall within the range of 18 – 25 V DC; in no case may it exceed 30 V *(otherwise the transmitter can be damaged).* Then, connect the

Adjustment of working stroke -design variant with current position transmitter

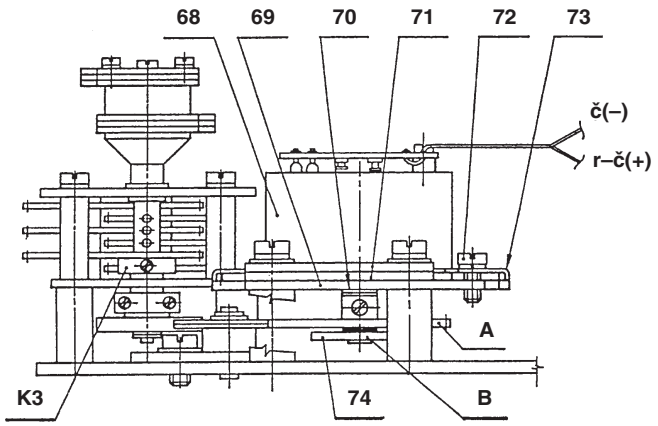

Legend:
60 – Current transmitter CPT 1A
61 – Transmitter supporting plate
62 – Spacing shims
63 – Oval shims
64 – Lock screw
65 – Shim plate
66 – Double gear
K3 – Sliding gear

Fig. 9 – ***Gears on current transmitter – gears (version with current position transmitter)***

Adjustment ranges of working stroke

Gear stage	Gear on transmitter	Type number		
		52 120	52 121, 52 122	52 123 – 125
I	A	0,9 -1,8	1,3 - 2,6	1 - 2
	B	1,6 -3,3	2,4 - 4,8	1,8 - 3,7
II	A	2,1 - 4,2	4,4 - 8,8	3,4 - 6,8
	B	3,4 - 6,9	8 - 16	6,1 - 12,3
III	A	6,7 - 13,4	14,8 - 29,6	11,4 - 22,8
	B	11,6 - 23,3	27 - 54	20,8 - 41,7
IV	A	21,4 - 42,9	49 - 99	37,8 - 76,5
	B	39,2 - 78,5	90 - 181	69,5 - 139
V	A	75 - 144	167 -334	129 - 258
	B	131 - 263	304 -609	234 - 470

Operating diagram of position-limit and signalling switches

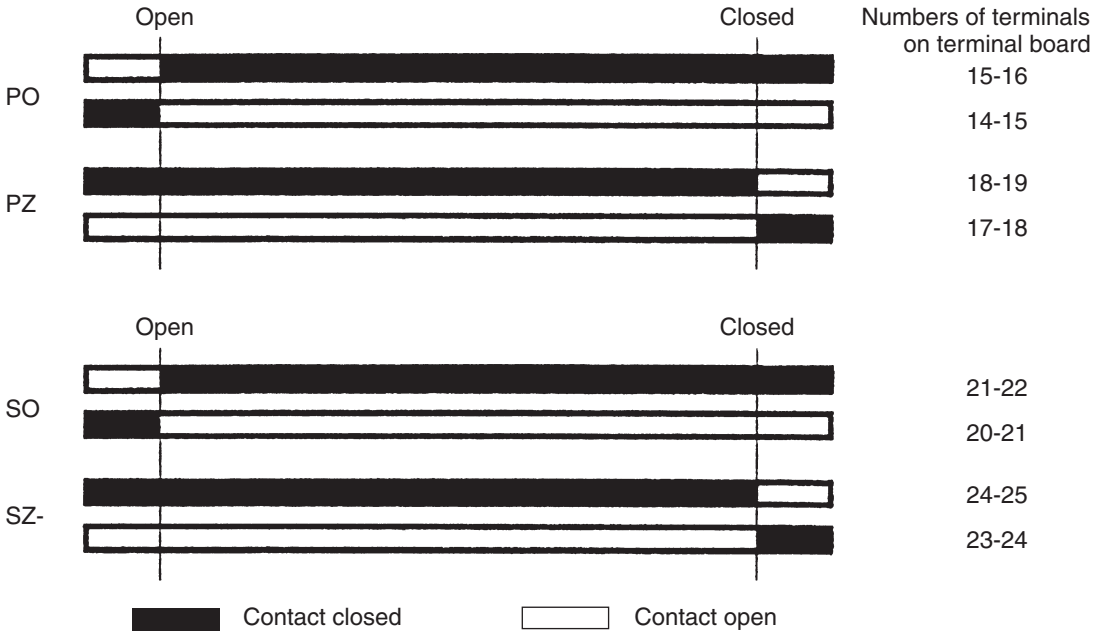

Fig. 10 – ***Operating diagram of position-limit and signalling switches***

transmitter so that the positive pole of the power source is connected to the positive pole of the transmitter, i.e. to the pin with red insulator *(r) + (nearer to the transmitter centre).* The terminal with white coating *(wired to the terminal 52)* is connected to the negative pole of the transmitter *(white insulator).* In the latest design variants the red conductor is plus and the black one is minus.

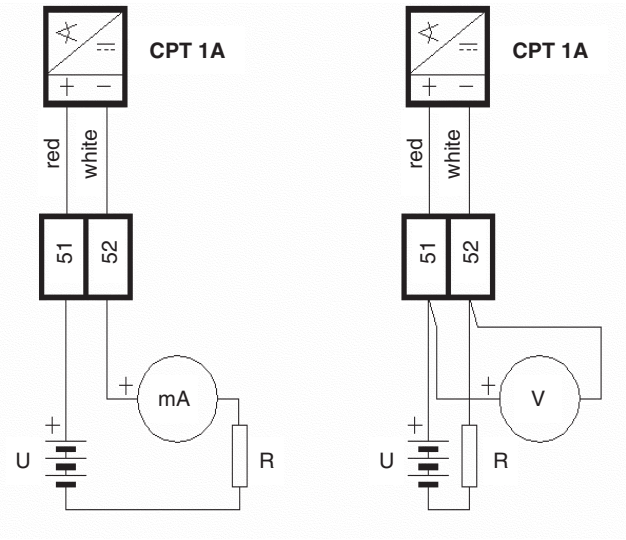

A milli-ammeter, preferentially a digital one with accuracy at least 0.5 %, is temporarily connected in series with the transmitter. The output shaft is moved to the position CLOSE. The signal value should decrease. If this is not the case, the output shaft should be rotated in the CLOSE direction until the signal starts decreasing and the output shaft reaches the CLOSE position.

Then, loosen the screws of the transmitter shim plates so that the whole transmitter can be turned to set the current to 4 mA, and retighten the screws of the shim plates. Thereafter, move the output shaft of the electric actuator to the position OPEN. Using the resistance trimmer on the transmitter face *(nearer to the edge)* set the current to 20 mA. The trimmer has 12 turn and no stops. Hence, it cannot be damaged.

In case the correction of the current 20 mA was considerable repeat adjustment for 4 mA and 20 mA once again. Disconnect the milli-ammeter. The screw secured by a drop of varnish situated nearer to the centre must not be turned. Retighten the countershafts fixing the transmitter shim plates and secure with a drop of varnish against loosening.

After completing the adjusting procedure, check voltage on the transmitter terminals using a voltmeter. The voltage should fall within the range of 9 – 16 V with current 20 mA.

Note:

The transmitter characteristics has two branches: the descending one and the ascending one with respect to the CLOSE position. The characteristics is selected by turning the transmitter body.

8) PACKING AND STORING

For deliveries to domestic customers, the electric actuators remain unpacked. The actuators are transported by covered conveyances or in transport containers. For deliveries to foreign customers, the electric actuators should be packed. Type and design of packing should be adapted to transport conditions and distance to the place of destination. Upon receipt of electric actuators from the manufacturer, the customer should check them for any possible damage during transport. Data on the actuator rating plate should be compared with those stated in the order and accompanying documentation. Any possible discrepancies, defects or damages should immediately be reported to the supplier. In such case, the commissioning is impossible.

If the non-packed electric actuator is not installed outright it should be stored in a dust-free room with temperature ranging between -25 to +50 °C and relative humidity up to 80 %. The room should be free of caustic gases and vapours, and protected against detrimental climatic effects. If the electric actuator is to be stored for a period longer that 3 years it is necessary, prior to commissioning, to replace the oil filling. Any manipulation at temperatures below -25 °C is forbidden. The electric actuators must not be stored outdoors or in rooms not protected against rain, snow and ice accretions. Excessive slushing grease should be removed before the actuator is put into operation. If the unpacked electric actuators are to be stored for a period longer than 3 months it is recommended to put a bag with silica gel or another suitable desiccant into the terminal box.

9) CHECKING OF INSTRUMENT FUNCTION AND ITS LOCATION

Prior to installation, inspect the electric actuator to make sure that it has not been damaged during storage. Function of the electric motor can be checked by connecting it to the supply mains and starting it for a short time. It is sufficient to watch whether the electric motor starts running and the output shaft is turning. The electric actuators should be installed so that an easy access is provided to the control handwheel, terminal

box and control box. It is also necessary to check that the installation complies with provisions of the paragraph “Operating conditions”. If another way of installation is required by local conditions, the manufacturer should be contacted.

10) ATTACHMENT TO VALVE

Place the electric actuator on the valve in such a way that its output shaft engages correctly into the valve coupling *(clutch?).* Attach the actuator to the valve using four *(eight)* screws. Loosen the lock screw of the handwheel and rotate it to perform a check of correct attachment of the electric actuator to the valve. Remove the terminal box cover and connect the electric actuator according to the wiring diagram.

For manipulation with the actuator during assembling with the valve, it is possible to utilize three suspension lugs fitted to each electric actuator. In no case, however, may these lugs be used for hanging the actuator with the valve.

11) ADJUSTMENT OF ELECTRIC ACTUATOR WITH VALVE

After fitting the electric actuator on the valve and checking its mechanical connection, the setting and adjusting is carried out as follows:

1) Bring the electric actuator manually into an intermediate position.
2) Connect the actuator to the supply mains and check a correct sense of rotation of the output shaft by a short start in the middle of the working stroke. When viewing into the control box the output shaft should rotate clockwise in the CLOSE direction.
3) Bring the actuator electrically near to the CLOSE position and complete adjustment to the CLOSE position by means of the handwheel. In this CLOSE position set the position-limit switching unit *(CLOSE position-limit switch PZ)* according to Point 7c and the potentiometer or current transmitter according to Point 7e.
4) Bring the output shaft into the position where the signalling switch SZ should change over. Adjustment of the CLOSE signalling switch SZ is carried out according to Point 7b.
5) Move the output shaft round by a required number of turn and adjust the OPEN position-limit switch PO according to Point 7c and the potentiometer according to Point 7e. Adjustment of the position-limit and signalling switches, and the position transmitter should be checked repeatedly.
6) Bring the output shaft into the position where the signalling switch SO should change over. Adjustment of the OPEN signalling switch SO is carried out according to Point 7b.

Caution!

When fitting the valve into piping, the valve should be set into its intermediate position using the electric actuator handwheel. By short starting of the electric motor make sure that the actuator rotates in correct direction. If this is not the case, reverse mutually two phase conductors in the electric motor terminal board.

12) OPERATION AND MAINTENANCE

Operation of rotary electric actuators is based on working conditions and is usually limited to transmission of pulses to respective functions. In case of a power supply failure, readjust the controlled device by the handwheel. If the electric actuator is connected into the automatic circuit *(which does not imply the regulating mode)* it is recommend to install devices for manual remote control into the circuit so that the electric actuator can be controlled even in case of a failure of the automatic device.

The operator should ensure that the electric actuator receives a prescribed maintenance, that it is protected against detrimental effects of the environment and climatic conditions which are not specifiedin the paragraph “Operating conditions”. Moreover, care should be taken to ensure that excessive heating-up of the surface of the explosion-proof closure of the motor and control box is prevented. It is necessary to make sure that rated values are not exceeded and excessive actuator vibrations are prevented.

Lubrication

The actuators are lubricated with plastic consistent lubricants or gearbox oil PP 80 *(see Table 1 or 2).*

Lubricants

Type number of actuator	Adjusting speed of output shaft [min^{-1}]	Surrounding temperature [°C]	
		-25 +60	-50 +60
52 120, 52 121, 52 122 52 123, 52 124	up to 40	M	M
	above 40	O	–
52 125	up to 70	M	M
	above 70	O	–

Note: *M – plastic lubricant*
O – gearbox oil

Actuators with plastic lubricant

The types of lubricant and amounts are listed in the table.

Lubricants in the drive units supplied are designed to last the entire useful life of the unit.

During the time when the drive units are in use, it is not necessary to change or monitor the amount of the lubricant.

The actuators with plastic lubricant are labelled *"Filled: solid grease"* on the power box at the side of the hand-wheel.

Type number of drive unit	Amount of lubricant *(kg)*	Type of lubricant for specific climatic conditions and temperature			
		T1 *(-25 – +75 °C)*	U1 *(-40 – +55 °C)*	UCHL1 *(-50 – +55 °C)*	CHL1 *(-60 – +40 °C)*
52 120	0,30	CIATIM – 201 GOST 6267-74 CIATIM – 221 GOST 9433-80			CIATIM – 221 GOST 9433-80
52 121, 52 122	0,50				
52 123, 52 124	0,70				
52 125	0,90				

Note: *The Ciatim 221 lubricant is designed for the friction points of rubber bushings against metal surfaces, roller brake, the hub of an outer cogged wheel of a planetary-gear differential (for locations of friction between the shaft and other surfaces).*

Actuators with oil charge

Check the level of oil at least yearly and refill, if required. Oil change should be made after 500 operating hours of the actuator, but not later than after 2 years of operation. The level of oil should be as high as the filling hole. For the actuator, Grade PP 80 motor-car gearbox oil or an equivalent oil with the same properties *(viscosity class 80 W, according to SAE/J306a)* should be used.

The amount of oil:

Type number	Quantity of oil (in l)
52 120	1,8
52 121, 52 122	3
52 123, 52 124	6,1
52 125	13

Once in two years, it is recommended to lightly smear the driving wheel gearing on the output shaft and the gear wheel of the position sensor in the control box. Use the lubricant CIATIM 201 or PM MOGUL LU 2-3.

13) FAILURES AND THEIR REMOVAL

1) The electric actuator is in its end position, it does not start, the motor is buzzing. Make sure that no phase conductor has been disconnected. If the slide valve is jammed and cannot be released by the handwheel or motor the electric actuator should be dismantled and the closure released mechanically.
2) After starting the electric actuator from the end position of the output shaft, the actuator stops spontaneously. In this case, it is necessary to ensure that the slot in the change-over gear *(Fig. 2)* stops in the end position of the output shaft *(after opening of the torque-limit switch)* before it runs onto the shifting device 26 *(Fig. 3).* This can be achieved by suitable turning of the actuator output shaft during connecting the actuator

to the valve or by suitable turning of the change-over gear with respect to the output shaft. For this purpose the change-over gear is provided with two slots for the spline. Moreover, the change-over gear can be reversed.

Cleaning – Overhaul

The electric actuators modact EEx should be kept clean and care should be taken that they are not fouled with dirt and dust. Cleaning of the cooling fins of the motor frame should be carried out at regular intervals and as frequently as required by the operating conditions. From time to time, it is necessary to make sure that all connecting and earthing terminals are properly tightened to prevent overheating during operation. It is recommended that the electric actuator be subjected to the overhaul once a year unless otherwise specified in the inspection instructions of electric devices. Expected service life of bearings of the driving electric motor is 20,000 operating hours. During cleaning and making repairs, the protective coating of the winding faces should be checked and, as required, repaired by an insulating varnish.

Checking of parts of explosion-proof closure

All actuator parts forming the explosion-proof closure *(cover and control box)* should be checked to ensure that they are not broken or otherwise damaged *(corroded, worn out etc.).* With the electric actuator disconnected, the sealing ring of cable bushings *(of electric motor and terminal box)* should be checked. Material of the sealing rings is aging and, if its hardness exceeds 65° IRHD, the sealing rings should be replaced during reassembly. Defective parts of the closure must not be used again in reassembling the electric actuator.

During all major repairs of the explosion-proof closure that might affect its safety, it is recommend that the electric actuator EEx be forwarded to the manufacturer for repair. The manufacturer can, according to approved documentation and with prescribed tests, bring the closure back to the state corresponding to ČSN EN 60 079-1 and ČSN EN 60 079-7.

Forwarding to repair

After dismantling the electric actuator from the valve, pack it into a wax-coated paper and put it into a box securing it against movement, and attach the packing sheet. Other documentation, particularly description of the failure and its cause, condition under which the actuator was operated, should be sent by regular mail.

The modification of the rising spindle is shown on dimensional sketch. Necessary dimensions are given in the table.

Table 1 – MODACT MO EEx electric actuators with AVM motors

– basic technical parameters and designs

Basic outfit: 1 electric motor type AVM; 2 torque-limit switches *(OPEN and CLOSE)*; 1 anti-condensation heater; 2 position-limit switches *(OPEN and CLOSE)*

Type designation	Torque [Nm]		Speed	Working stroke [revolutions]	Type of lubricant	Electric motor					Weight [kg]		Type number	
	tripping	starting	[RPM]			Type AVM	Power [kW]	Speed [1/min]	In (400 V)	Iz / In	Design cast-iron	Design aluminium	basic 1 2 3 4 5	additional 6 7 8 9 10
			8											x x H x
MOEEx 40/220 – 10		220	10			71M06	0,18	900	0,74	1,8	–	47		x x I x
MOEEx 40/130 – 17		130	17			71M06	0,18	900	0,74	1,8	–	47		x x J x
MOEEx 40/90 – 25	20 – 40	90	25			71MK04	0,25	1360	0,75	3,4	–	47		x x 1 x
MOEEx 40/80 – 40		80	40			71M04	0,37	1360	1,05	3,1	–	49		x x 2 x
MOEEx 40/90 – 50		90	50		♦	71MK02	0,37	2810	0,9	5,6	–	49		x x K x
MOEEx 40/55 – 80		55	80		♦	71MK02	0,37	2810	0,9	5,6	–	49		x x L x
			8											x x M x
MOEEx 80/220 – 10	40 – 80	220	10	2–250 (2–620)		71M06	0,18	900	0,74	1,8	–	47		x x N x
MOEEx 80/130 – 17		130	17			71M06	0,18	900	0,74	1,8	–	47	52120	x x P x
MOEEx 63/90 – 25	40 – 63	90	25			71MK04	0,25	1360	0,75	3,4	–	47		x x 3 x
MOEEx 63/80 – 40		80	40			71M04	0,37	1360	1,05	3,1	–	49		x x 4 x
MOEEx 80/130 – 50	40 – 80	120	50		♦	71M02	0,55	2810	1,3	5,9	–	49		x x R x
MOEEx 63/80 – 80	40 – 63	80	80		♦	71M02	0,55	2810	1,3	5,9	–	49		x x S x
			8											x x T x
MOEEx 125/160 – 11	80 – 125	160	11			71MK04	0,25	1360	0,75	3,4	–	47		x x 6 x
MOEEx 125/180 – 17		170	17			71ML06	0,25	900	0,95	2,9	–	47		x x U x
MOEEx 100/130 – 25	63 – 100	130	25			71M04	0,37	1360	1,05	3,1	–	49		x x 5 x
MOEEx 100/130 – 50		130	50		♦	71M02	0,55	2810	1,3	5,9	–	49		x x V x
			8											x x M x
MOEEx 100/220 – 10		200	10			71M06	0,18	900	0,74	1,8	70	47		x x N x
MOEEx 100/180 – 17	63 – 100	180	17			71ML06	0,25	900	0,95	2,9	70	47		x x P x
MOEEx 100/130 – 25		130	25			80MK06	0,37	910	1,1	3,3	70	57		x x 1 x
MOEEx 100/130 – 40		130	40			80MK04	0,55	1390	1,45	4,2	71	58		x x 2 x
MOEEx 100/110 – 63	63 – 85	110	63		♦	80M04	0,75	1380	1,9	3,9	71	58		x x 3 x
MOEEx 100/170 – 80	63 – 100	170	80		♦	80M02	1,1	2940	3,0	6,8	78	58		x x R x
MOEEx 100/110 – 100	63 – 85	110	100		♦	90LK04	1,1	1410	2,7	4,6	71	65		x x 4 x
MOEEx 100/130 – 145	63 – 100	130	145		♦	90LK02	1,5	2890	3,2	6,8	78	65	52121	x x S x
			8											x x T x
MOEEx 160/300 – 10		300	10			71ML06	0,25	900	0,95	2,9	70	47		x x U x
MOEEx 160/210 – 16	100 – 160	210	16			80MK06	0,37	910	1,1	3,3	70	57		x x 5 x
MOEEx 160/210 – 25	100 – 160	210	25			80M06	0,55	910	1,6	3,4	71	57		x x 6 x
MOEEx 130/170 – 40	100 – 130	170	40			80M04	0,75	1380	1,9	3,9	71	58		x x 7 x
MOEEx 130/170 – 65	100 – 130	170	65	2–250 (2–620)	♦	90LK04	1,1	1410	2,7	4,6	71	65		x x 8 x
MOEEx 160/240 – 80	100 – 160	240	80		♦	90LK02	1,5	2890	3,2	6,8	78	65		x x V x
MOEEx 130/170 – 100	100 – 130	170	100		♦	90L04	1,5	1410	3,4	4,8	71	66		x x 9 x
MOEEx 160/210 – 125	100 – 160	210	125		♦	90L02	2,2	2865	4,5	6,0	78	67		x x A x
			8											x x H x
MOEEx 250/325 – 10	160–250	325	10			80MK06	0,37	910	1,1	3,3	70	57		x x 0 x
MOEEx 250/325 – 16	160–250	325	16			80M06	0,55	910	1,6	3,4	71	58		x x 1 x
MOEEx 210/280 – 25	160–210	280	25			90LK06	0,75	940	2,1	3,9	81	68	52122	x x 2 x
MOEEx 210/280 – 40	160–210	280	40			90LK04	1,1	1410	2,7	4,6	78	65		x x 3 x
MOEEx 210/280 – 70	160–210	280	70		♦	90L04	1,5	1410	3,4	4,8	79	66		x x 4 x
MOEEx 250/330 – 80	160–250	330	80		♦	90L02	2,2	2865	4,5	6,0	80	67		x x 5 x
MOEEx 400/520 – 16	250–400	520	16			90L08	0,75	695	2,6	3,3	126	113		x x 0 x
MOEEx 400/520 – 25	250–400	520	25			90L06	1,1	935	2,9	4,1	125	112		x x 1 x
MOEEx 500/650 – 40	250–500	650	40			112M06	2,2	945	5,4	5,0	146	126	52123	x x 2 x
MOEEx 400/520 – 63	250–400	520	63		♦	100L04	3,0	1435	6,5	5,9	132	112		x x 3 x
MOEEx 400/520 – 100	250–400	520	100		♦	112M04	4,0	1430	8,5	6,5	150	130		x x 4 x
MOEEx 630/820 – 16	320–630	820	16			100L08	1,1	690	3,1	3,6	128	108		x x 0 x
MOEEx 550/715 – 25	320–550	715	25	2–240 (2 –470)		100L06	1,5	940	3,9	4,9	128	108	52124	x x 1 x
MOEEx 630/820 – 63	320–630	820	63		♦	112M04	4,0	1430	8,5	6,5	150	130		x x 2 x
MOEEx 960/1250-32	630–960	1250	32			132M08	3,0	725	7,3	5,5	239			x x 1 x
MOEEx 1100/1400-45	630–1100	1400	45		♦	132MK06	4,0	975	9,2	7,0	240		52125	x x 2 x
MOEEx 1100/1400-63	630–1100	1400	63		♦	132M06	5,5	970	12,5	6,5	248			x x 3 x
MOEEx 920/1200-100	630–920	1200	100		♦	132M04	7,5	1455	15,5	6,8	243			x x 4 x

Notes: *– The rated torque is 60 % of the maximum tripping torque in duty S2 and 40 % of the maximum tripping torque in duty S4.*

– The 6th, 7th and 9th places of the type number should be completed with respective digit or letter from Table 3.

– Design variants operating at another supply voltage than that given in the table, are available upon special request.

– Electric motors designated in the table with + have built-in thermistors PTC connected to the terminal cover on two non-exposive bushings. This built-in heat protection, in combination with the control system, shall isolate the electric motor from the mains supply if temperature of the eletric motor winding exceeds 145 °C during thermal overloading caused by failures.

♦ *– Mark of actuators filled with oil. Other actuators are filled with plastic lubricant.*

Table 2 – MODACT MO EEx electric actuators with 4 KTC motors

– basic technical parameters and designs

Basic outfit:	1 electric motor type 4 KTC 1 anti-condensation heater	2 torque-limit switches *(OPEN and CLOSE)* 2 position-limit switches *(OPEN and CLOSE)*

Type designation	Torque [Nm]		Speed	Working stroke [revolutions]	Type of lubricant	Electric motor					Weight [kg]		Type number	
	tripping	starting	[RPM]			Type 4 KTC	Power [kW]	Speed [1/min]	In (400 V)	Iz / In	Design cast-iron	Design aluminium.	basic 1 2 3 4 5	additional 6 7 8 9 10
MO EEx 40/90-25	20 - 40	90	25	2-250 (2-620)		71A - 4	0,25	1355	0,75	3,8	–	49	52120	x x A x x
MO EEx 40/80-40	20 - 40	80	40			71B - 4	0,37	1350	1,05	3,8	–	50		x x B x x
MO EEx 63/90-25	40 - 63	90	25			71A - 4	0,25	1355	0,75	3,8	–	49		x x C x x
MO EEx 63/80-40	40 - 63	80	40			71B - 4	0,37	1350	1,05	3,8	–	50		x x D x x
MO EEx 100/130-25	63 - 100	130	25			71B - 4	0,37	1350	1,05	3,8	–	50		x x E x x
MO EEx 125/160-11	80 - 125	160	11			71A - 4	0,25	1355	0,75	3,8	–	49		x x F x x
MO EEx 100/130-25	63 - 100	130	25	2-250 (2-620)		80A - 6	0,37	925	1,1	3,6	76	63	52121	x x B x x
MO EEx 100/130-40	63 - 100	130	40			80A - 4	0,55	1410	1,38	4,6	76	63		x x C x x
MO EEx 100/130-63	63 - 100	130	63		♦	80B - 4	0,75	1400	1,8	5,0	77	64		x x D x x
MO EEx 100/130-100	63 - 100	130	100		♦	90S - 4	1,1	1410	2,4	5,4	83	70		x x E x x
MO EEx 160/210-16	100 - 160	210	16			80A - 6	0,37	925	1,1	3,6	76	63		x x F x x
MO EEx 160/210-25	100 - 160	210	25			80B - 6	0,55	915	1,5	4,1	76	63		x x H x x
MO EEx 160/210-40	100 - 160	210	40			80B - 4	0,75	1400	1,8	5,0	77	64		x x I x x
MO EEx 160/210-65	100 - 160	210	65		♦	90S - 4	1,1	1410	2,4	5,4	83	70		x x J x x
MO EEx 160/210-100	100 - 160	210	100		♦	90L - 4	1,5	1405	3,25	5,8	86	73		x x K x x
MO EEx 160/210-125	100 - 160	210	125		♦	90L - 2	2,2	2845	4,4	6,9	86	73		x x L x x
MO EEx 250/325-10	160 - 250	325	10			80A - 6	0,37	925	1,1	3,3	76	63	52122	x x A x x
MO EEx 250/325-16	160 - 250	325	16			80B - 6	0,55	915	1,5	3,4	77	64		x x B x x
MO EEx 250/325-25	160 - 250	325	25			90L - 6	1,1	915	3,0	4,1	87	74		x x C x x
MO EEx 250/325-40	160 - 250	325	40			90S - 4	1,1	1410	2,4	5,4	83	70		x x D x x
MO EEx 210/280-65	160 - 210	280	65		♦	90L - 4	1,5	1405	3,25	5,8	86	73		x x E x x
MO EEx 250/325-80	160 - 250	325	80		♦	90L - 2	2,2	2845	4,4	6,9	86	73		x x F x x
MO EEx 500/650-16	250 - 500	650	16	2-240 (2-470)		100LB - 8	1,1	695	3,25	3,8	135	122	52123	x x A x x
MO EEx 500/650-25	250 - 500	650	25			100L - 6	1,5	930	3,7	4,7	134	121		x x B x x
MO EEx 500/650-40	250 - 500	650	40			112M - 6	2,2	960	5,0	6,1	153	133		x x C x x
MO EEx 400/520-63	250 - 400	520	63		♦	100LB - 4	3,0	1400	6,4	5,3	137	117		x x D x x
MO EEx 400/520-100	250 - 400	520	100		♦	112M - 4	4,0	1430	8,2	6,6	151	131		x x E x x
MO EEx 550/715-16	320 - 550	715	16			100LB - 8	1,1	695	3,25	3,8	137	117	52124	x x A x x
MO EEx 630/820-25	320 - 630	820	25			100L - 6	1,5	930	3,7	4,7	137	117		x x B x x
MO EEx 630/820-63	320 - 630	820	63		♦	112M - 4	4,0	1430	8,2	6,6	151	131		x x C x x
MO EEx 950/1235-32	630 - 950	1235	32	2-240 (2-470)	♦	132M - 8	3,0	710	7,2	4,8	237		52125	x x A x x
MO EEx 950/1235-45	630 - 950	1235	45		♦	132MA - 6	4,0	960	8,8	6,3	240			x x B x x
MO EEx 950/1235-63	630 - 950	1235	63		♦	132MB - 6	5,5	955	11,8	6,1	247			x x C x x
MO EEx 950/1235-100	630 - 950	1235	100		♦	132M - 4	7,5	1445	14,8	6,5	245			x x D x x

Notes: *– The rated torque is 60 % of the maximum tripping torque in duty S2 and 40 % of the maximum tripping torque in duty S4.*

– The 6th, 7th and 9th places of the type number should be completed with respective digit or letter from Table 3.

– Rated currents for different feeding voltages than those given in the table are available on request at the manufacturer.

– Electric motors have built-in thermistors PTC connected to the terminal box cover on 2 terminals. If, in case of thermal overloads caused by failures, the electric motor winding is heated up to more than to 145 °C this built-in thermal protection, in cooperation with the control system, will disconnect the electric motor from the supply mains.

– Connection of the winding of electric motors 4KTC can be either of star or delta type (data in this table assume an electric motor for supply voltage 3 x 400 V in star connection). Supply voltages and currents for both types of connection are specified on the motor rating plate.

♦ *– Mark of actuators filled with oil. Other actuators are filled with plastic lubricant.*

Table 3 – Specification of type number

Place in the type number	1.	2.	3.	4.	5.	.	6.	7.	8.	9.	10.
Type number	5	2	1	2	x	.	x	x	x	x	x

6th place of type number

Connecting dimensions		
Connecting dimensions according ISO and DIN	Shape A	5
	Shape B	6
	Shape C	7
	Shape D	8
	Shape E	9
Connecting dimensions according OST *(Russia)*	Connection M	M
	Connection A	A
	Connection Б	B
	Connection B	V
	Connection Г	G

According to the actuators size, the connection OST *(Russia)* is as follows:

T. No. 52120	Connection M, A, Б
T. No. 52121 and 52122	Connection A, Б, B
T. No. 52123 and 52124	Connection Б, B
T. No. 52125	Connection B, Г

7th place of type number

Working stroke (turn)	
2 – 250 *(2 – 240)* – basic design	0
2 – 620 *(2 – 470)* – special design	A
2 – 250 *(2 – 240)* – with block of local control, M-D two-pole	1
2 – 250 *(2 – 240)* – with block of local control, M-D four-pole	2
2 – 620 *(2 – 470)* – with block of local control, M-D two-pole	B
2 – 620 *(2 – 470)* – with block of local control, M-D four-pole	C

8th place of type number

Tripping torque, speed and other technical parameters, including designation, are given in Tables 1 or 2. At this place, the figure or letter corresponding to required parameters should be given.

9th place of type number

Signalling, position transmitter	
Without signalling and position transmitter *(basic design)*	0
Without position transmitter, with signalling	1
With all units and potentiometer 1 x 100 Ω	2
With all units and current transmitter CPT 1A 4 – 20 mA	3
Without signalling, with potentiometer 1 x 100 Ω	4
Without signalling, with current transmitter CPT 1A 4 – 20 mA	5
Without signalling, with doubled position change-over switches, without position transmitter*)	6
Without signalling, with doubled position change-over switches, with resistance position transmitter 1 x 100 Ω*)	7
Without signalling, with doubled position change-over switches, with current transmitter CPT 1A*)	8

*) *Design with this designation for working stroke 2 – 240 rev. – basic design.*

10th place of type number

Surrounding temperature	
For ambient temperature of -25 °C do +55 °C	without designation
For ambient temperature of -50 °C do +55 °C	F
For ambient temperature of -60 °C do +55 °C	FF

Attachment dimensions of **MODACT MO EEx** electric actuators
(basic design without adapter)

The electric actuators are designed for direct mounting onto the controlled device *(valve etc.)*. They are attached by means of a flange or clutch according to ČSN 186314. The flanges of the electric actuators also comply with ISO 5210. The clutches for transmission of motion to the valve are:

Shape A *(with adapter),* according to ČSN EN ISO 5210 *(13 3090)*
Shape B1 *(with adapter),* according to ČSN EN ISO 5210 *(13 3090)*
Shape B3 *(without adapter),* according to ČSN EN ISO 5210 *(13 3090)*
Shape D *(without adapter)*
Shape C *(without adapter),* according to DIN 3338

Shape C according to DIN 3338

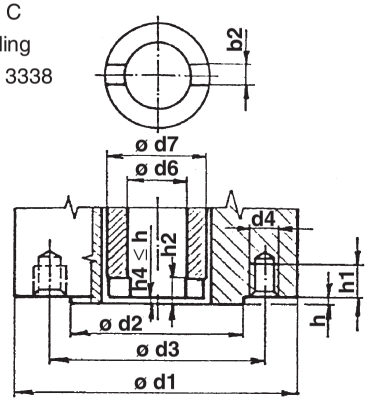

Shape D

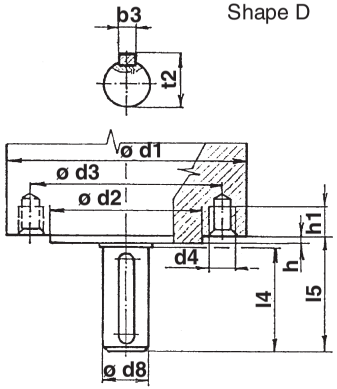

Shape B3 according to ČSN EN ISO 5210 *(13 3090)*

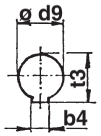

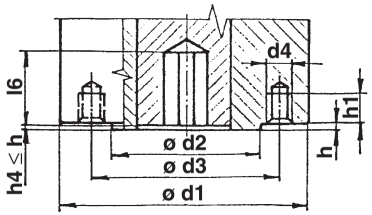

Shape	Dimension	Type number / Flange			
		52 120	**52 121, 2**	**52 123, 4**	**52 125**
C, D, B3 *(identical dimensions)*	ø d1 *(orientation value)*	125	175	210	300
	ø d2 f8	70	100	130	200
	ø d3	102	140	165	254
	d4	M 10	M 16	M 20	M 16
	Number of tapped holes	4	4	4	8
	h $^{0}_{-0,2}$	3	4	5	5
	h1 min. 1,25 d4	12,5	20	25	20
C	ø d7	40	60	80	100
	h2 min.	10	12	15	16
	b2 H11	14	20	24	30
	ø d6	30	41,5	53	72
D	ø d8 g6	20	30	40	50
	l4	50	70	90	110
	t2 max.	22,5	33	43	53,5
	b3 h9	6	8	12	14
	ø l6	55	76	97	117
B3	ø d9 H8	20	30	40	50
	l6 min.	55	76	97	117
	t3	22,8	33,3	43,3	53,8
	b4 Js9	6	8	12	14

Dimensional sketch of **MODACT MO EEx** electric actuator

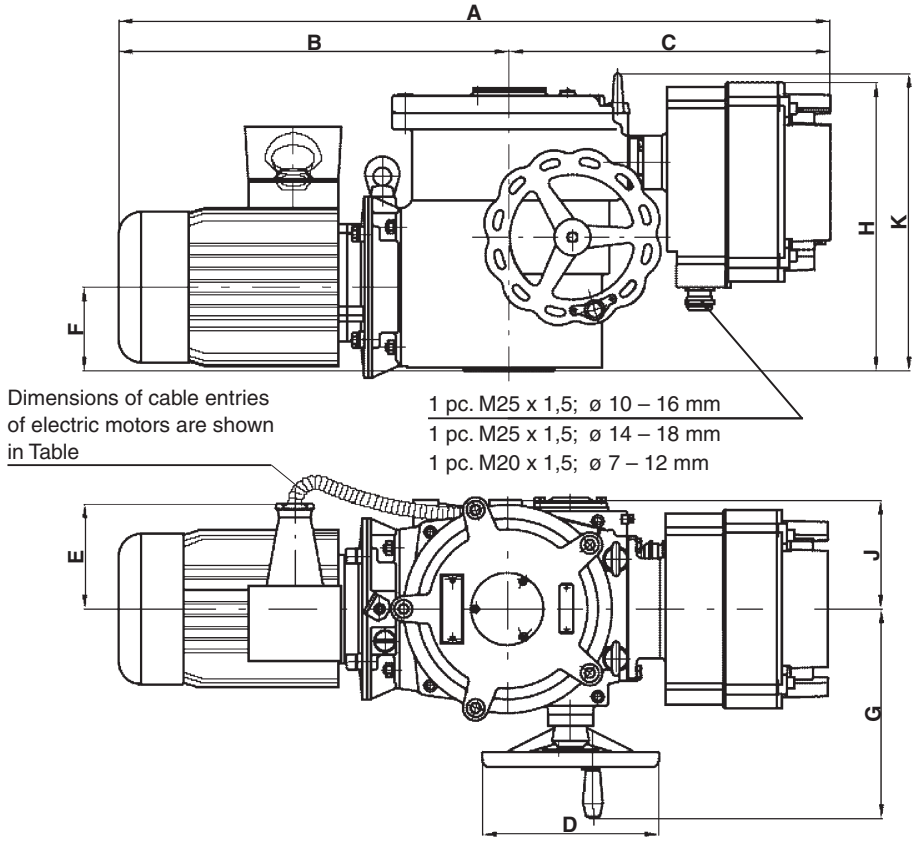

Cable entries of electric motors used in multi-revolution actuators MODACT MO EEx

Type of electric motor	Axial height of motor	Number of entries x range of cable Ø *(thread size)*
AVM	71, 80, 90, 100	1 x ø 13 to 16 mm
	112, 132	2 x ø 17 to 20 mm
4KTC	71	2 x ø 6 to 12 mm *(M20 x 1,5)*
	80, 90, 100	1 x ø 6 to 12 mm *(M20 x 1,5)*
		1 x ø 13 to 18 mm *(M25 x 1,5)*
	112	1 x ø 6 to 12 mm *(M20 x 1,5)*
		1 x ø 13 to 18 mm *(M32 x 1,5)*
	132	1 x ø 6 to 12 mm *(M20 x 1,5)*
		2 x ø 13 to 18 mm *(M32 x 1,5)*

The above listed cable entries of electric motors (see the table) and the actuator are available as a standard. Requirement for other diameters of connecting cables should be specified in the order.

Dimension	Type number			
	52 120	**52 121, 2**	**52 123, 4**	**52 125**
A max.	569	708	832	966
B max.	340	462	573	684
C	239	246	259	282
D	ø 160	ø 200	ø 250	ø 375
E	130	130	165	165
F	80	92	123	153
G	215	256	310	362
H max.	306	318	382	438
J	90	120	145	178
K	315	335	400	442

Holes for additional attachment of **MODACT MO EEx** electric actuator

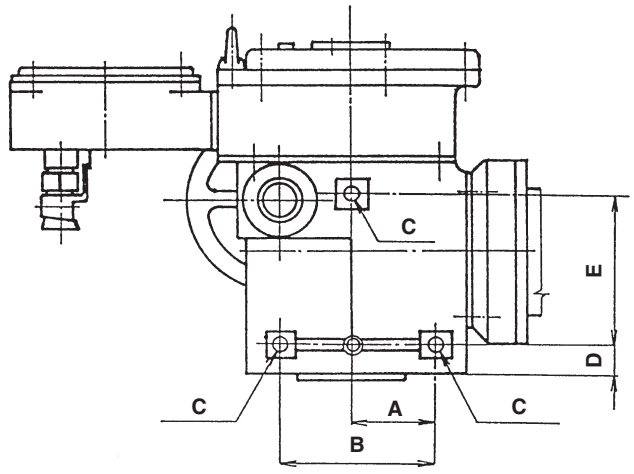

Dimension	Type number			
	52 120	**52 121, 2**	**52 123, 4**	**52 125**
A	61	90	110	120
B	110	160	210	240
C	M 10	M 12	M 16	M 20
D	16	21	23	47
E	120	140	200	220

Note:

The holes intended for additional attachment of MODACT electric actuators only serve for supporting the actuator weight and may not be subjected to load with any additional force.

Modification for rising spindle

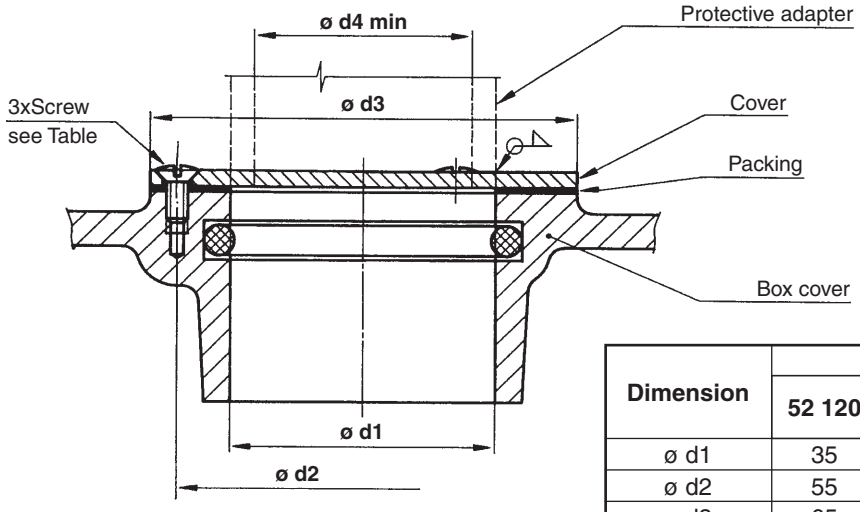

Dimension	Type number			
	52 120	**52 121 52 122**	**52 123 52 124**	**52 125**
ø d1	35	50	75	80
ø d2	55	70	100	100
ø d3	65	80	112	112
ø d4	30	41,5	53	72

Screw ČSN EN ISO 2010	M4x10	M4x10	M5x10	M5x10

Adapters to **MODACT MO EEx** electric actuators

Shape A
according to ČSN EN ISO 5210 *(13 3090)*

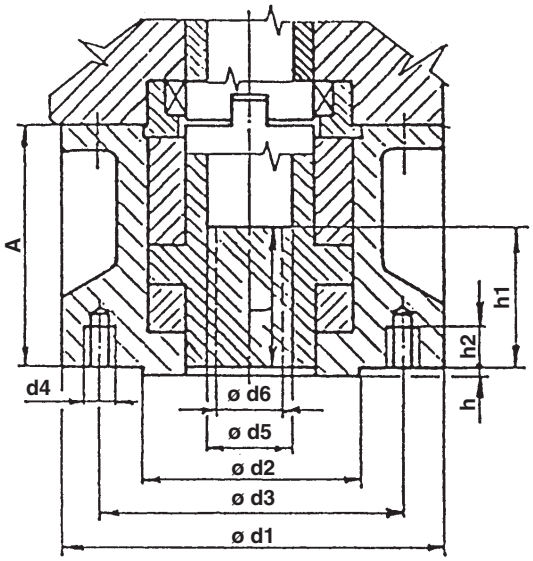

Shape B1
according to ČSN EN ISO 5210 *(13 3090)*

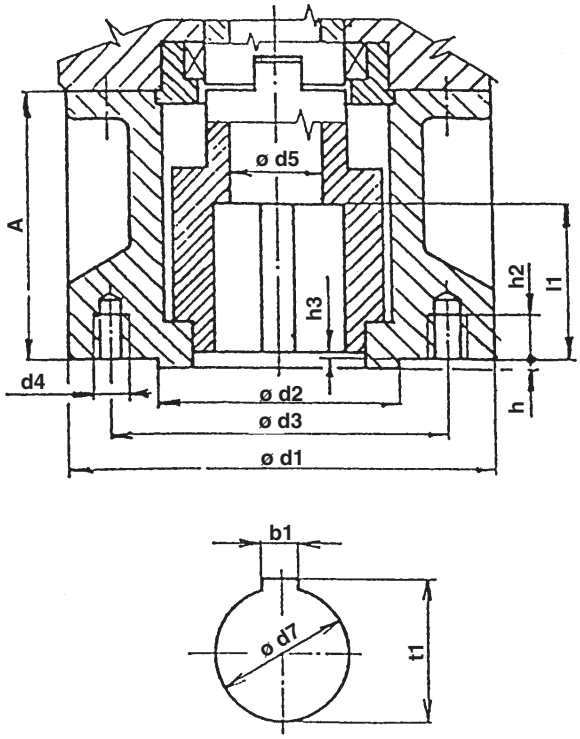

Assignment of adapters to electric actuators

Shape	Dimension	Type number			
		52 120	**52 121, 2**	**52 123, 4**	**52 125**
A, B1 *(identical dimensions)*	ø d1	125	175	210	300
	ø d2 f8	70	100	130	200
	ø d3	102	140	165	254
	d4	M 10	M 16	M 20	M 16
	Number of holes d4	4	4	4	8
	h	3	4	5	5
	h2 min.	12,5	20	25	20
A	A	63,5	110	179	155
	ø d5	30	38	53	63
	ø d6 max.	28	36	44	60
	h1 max.	43,5	65	92	110
	l min.	45	55	70	90
B1	A	63,5	110	122	155
	ø d5	30	40	50	65
	l1 min.	45	65	80	110
	h3 max.	3	4	5	5
	b1	12	18	22	28
	ø d7 H9	42	60	80	100
	t1	45,3	64,4	85,4	106,4

Internal wiring diagrams of **MODACT MO EEx** electric actuators

Legend:

BQ1 *(V1)*	– Position transmitter - resistance 1x100 Ω	SQ5 *(PZ)*	– CLOSE position-limit switch
CPT 1A	– Current position transmitter	SQ4 *(SO)*	– OPEN signalling switch
SQ1 *(MO)*	– OPEN torque-limit switch	SQ6 *(SZ)*	– CLOSE signalling switch
SQ2 *(MZ)*	– CLOSE torque-limit switch	EH *(R)*	– Anti-condensation heaters
SQ3 *(PO)*	– OPEN position-limit switch	T1, T2	– Thermistors

Positions of the switches: L – Local; R – Remote; O – Open; C – Close

Notes:

Some electric motors are fitted with thermistors (see Sheet 13, Note 4 of TP 12-02/92, dashed line here). The thermistors should be interconnected with the circuits of thermistor protection of motors (e.g. Siemens Sirius 3RN1). These circuits are not supplied by ZPA Pečky.

In the design version with the current transmitter CPT 1A, the user shall provide for connection of the two-wire circuit of the current transmitter with electric earth of the associated regulator, computer etc. The connection should be realized only at a single point in any section of the circuit outside the electric actuator. Voltage between the electronics and the case of the current transmitter must not exceed 50 V DC.

Technical parameters of explosion-proof **MODACT MO EEx** actuators in connection with linear thrust device

MO EEx actuators									MO EEx actuators + linear thrust device				
Type number		Electric motor				Torque (Nm)		Ad-justing speed (RPM)	Linear thrust device	Thrust (kN)		Speed (mm/min)	Working stroke (mm)
Basic	Comple-mentary	Power (W)	RPM (1/min)	In (A)	Iz/I n	Tripping**	Starting			Tripping range*	Starting		
52120	7 x H x					20 – 40 (23 – 30)		8	MT15	10-20 (11,5-15)		40	10 – 100
	7 x I x	180	900	0,74	1,8		220	10			110	50	
	7 x J x	180	900	0,74	1,8		130	17			65	85	
	7 x 1 x	250	1360	0,75	3,4		100	25			50	125	
	7 x A x	250	1370	0,69	3,8		120				60		
	7 x M x					40 – 63 (30 – 50)		8	MT25	20-31,5 (15-25)		40	
	7 x N x	180	900	0,74	1,8		220	10			110	50	
	7 x P x	180	900	0,74	1,8		130	17			65	85	
	7 x 3 x	250	1360	0,75	3,4		100	25			50	125	
	7 x C x	250	1370	0,69	3,8		120				60		
52121	7 x M x					63 – 100 (60 – 97)		8	MT40	26-41,5 (25-40)		24	20 – 120
	7 x N x	180	900	0,74	1,8		200	10			83	30	
	7 x P x	250	900	0,95	2,9		180	17			75	51	
	7 x 1 x	370	910	1,1	3,3		140	25			58	75	
	7 x B x	370	925	1,1	3,6		180				75		
	7 x 2 x	550	1390	1,45	4,2		140	40			58	120	
	7 x C x	550	1400	1,34	4,4		170				70		
	7 x T x					100 – 160 (97 – 153)		7	MT63	41,5-66,5 (40-63)		21	
	7 x U x	250	900	0,95	2,9		280	10			116	30	
	7 x F x	370	925	1,1	3,6		280	16			116	48	
	7 x 6 x	550	910	2,6	3,4		240	25			100	75	
	7 x H x	550	915	1,5	4,1		280				116		
	7 x I x	750	1410	1,7	5,0		250	40			104	120	

** Stated tripping thrust range correspond with the tripping torque range ***

Dimensional sketch of MT15 and MT25 linear thrust device

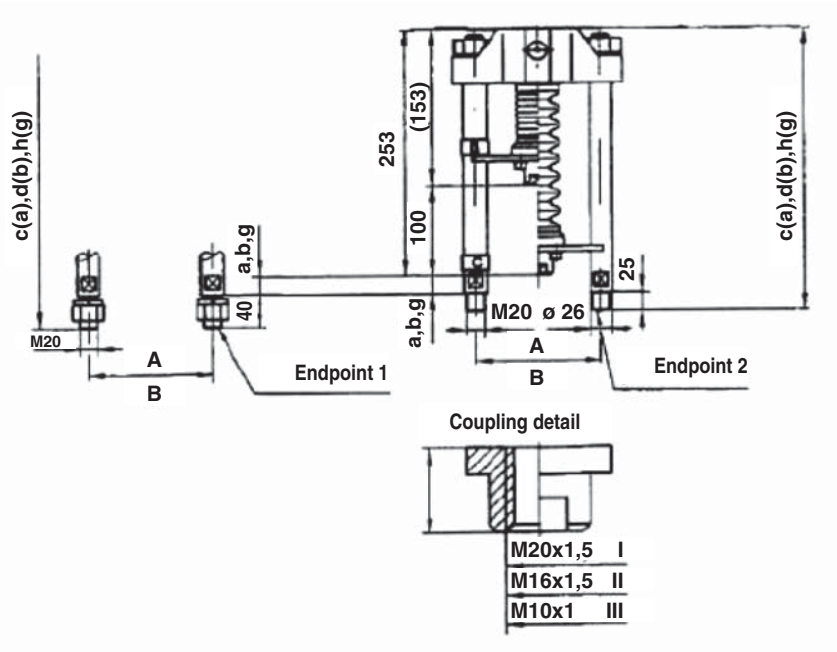

Specific embodiments of the linear thrust device is a combination of letters and numbers in the following order:

Order of device designation code	Dimension of connection parameter	Code of dimension designation	Dimension	Device height		Note
				Endpoint 1	Endpoint 2	
1	Spacing of columns	A	160 mm			
		B	150 mm			
2	Position “CLOSED”	a	30 mm	c = 323 mm	c = 308 mm	a – Short columns
		b	74 mm	d = 367 mm	d = 352 mm	b – Long columns
		g	130 mm	h = 423 mm	h = 408 mm	c – Column length 130 mm
3	End of columns	1	Endpoint 1			M20 thread 40 mm length with nut
		2	Endpoint 2			M20 thread 25 mm length
4	Thread in coupling	I	M20x1,5			
		II	M16x1,5			
		III	M10x1			after agreement with the manufacturer

For example, design Aa1I indicates linear thrust device MT15 and MT25 with a spacing of columns 160 mm, distance of 30 mm from the end of the coupling to the end of the columns in the “closed” position, end of the columns in design 1 with thread in the coupling M20 x 1,5.

Dimensional sketch of MT40 and MT63 linear thrust device

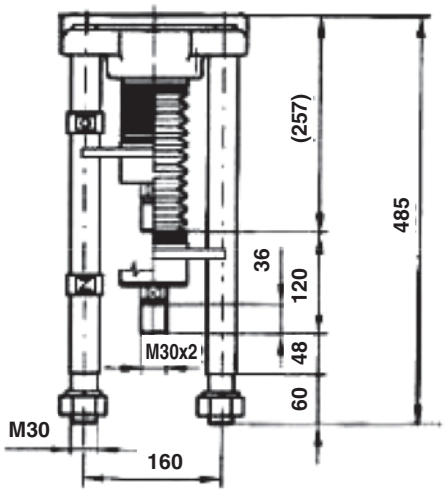

Internal wiring diagrams of **MODACT MO EEx** electric actuators

– Design with resistance position transmitter 1 x 100 Ω

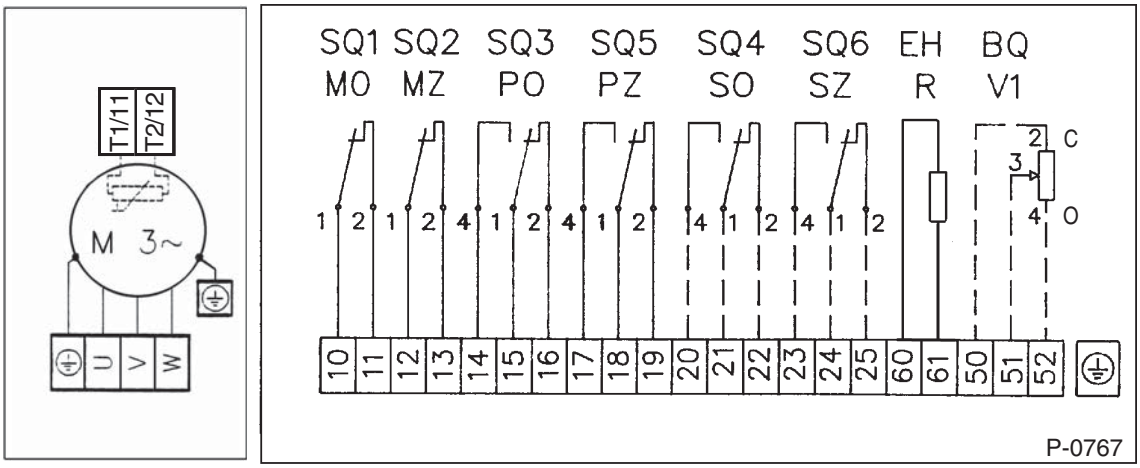

Electric motor | Control box | External protective terminal

– Design with current position transmitter

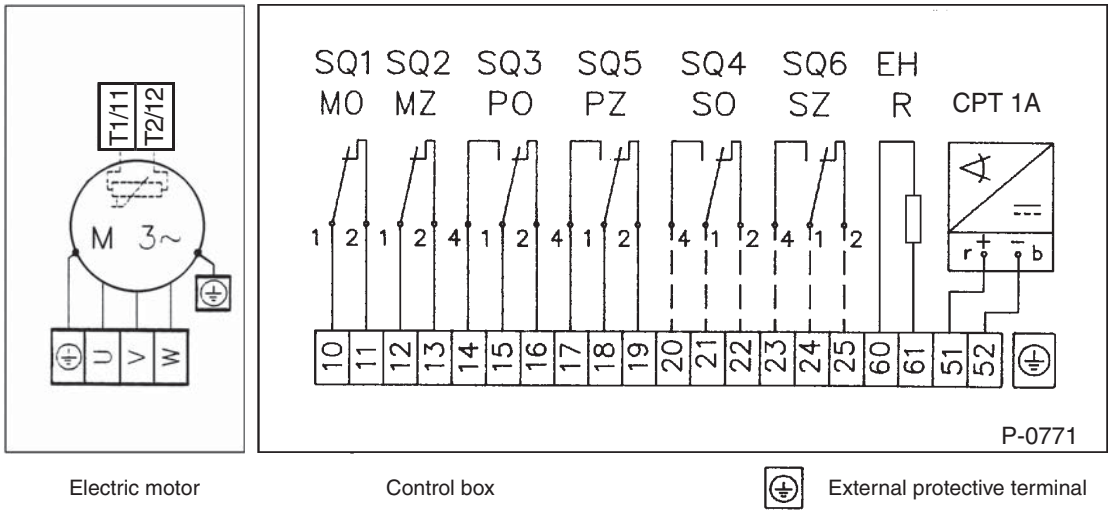

Electric motor | Control box | External protective terminal

Internal wiring diagrams of **MODACT MO EEx** electric actuators
version without signaling change-over switches
with two doubled position change-over switches.
The doubled position change-over switches (PO1, PO2, and PZ1, PZ2)
always switch at the same time

– Design with potentiometer 1 x 100 Ω or without transmitter

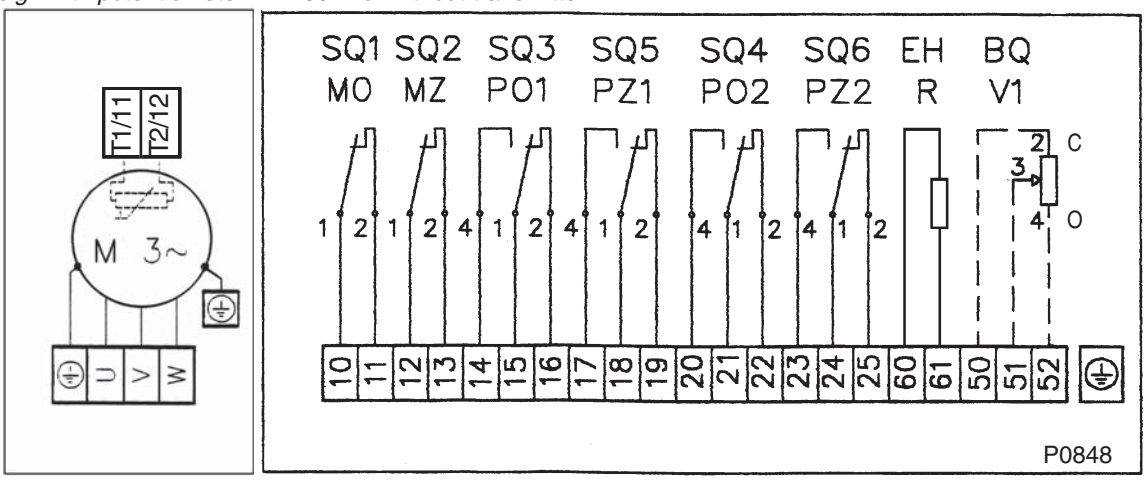

Electric motor Control box External protective terminal

– Design with current position transmitter CPT 1A

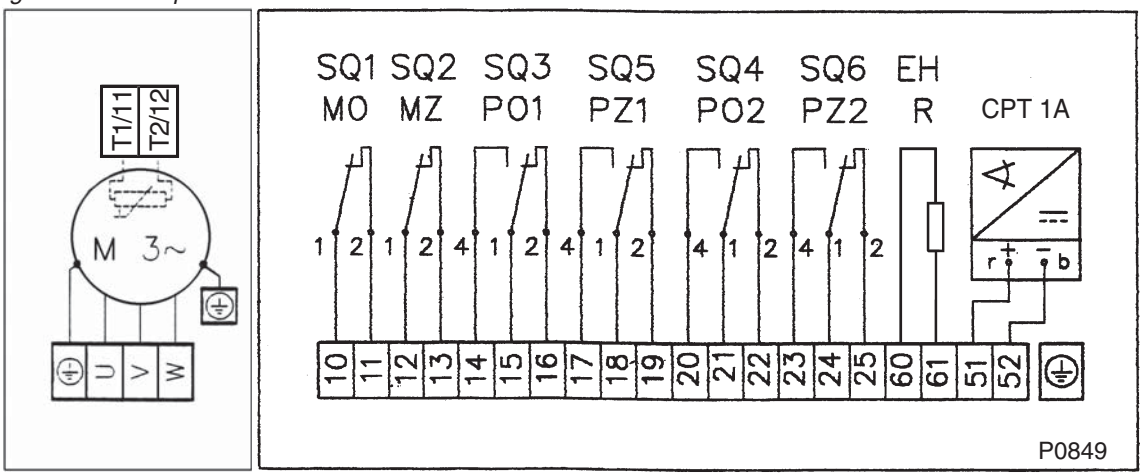

Electric motor Control box External protective terminal

Internal wiring diagram of **MODACT MO EEx** electric actuators of mining version I M2

Electric outfit and wiring according to wiring diagram P-0767 is certified for using actuators in spar-safe control circuits. The signalling switches, anti-condensation heater, and resistance transmitter are optional accessories.

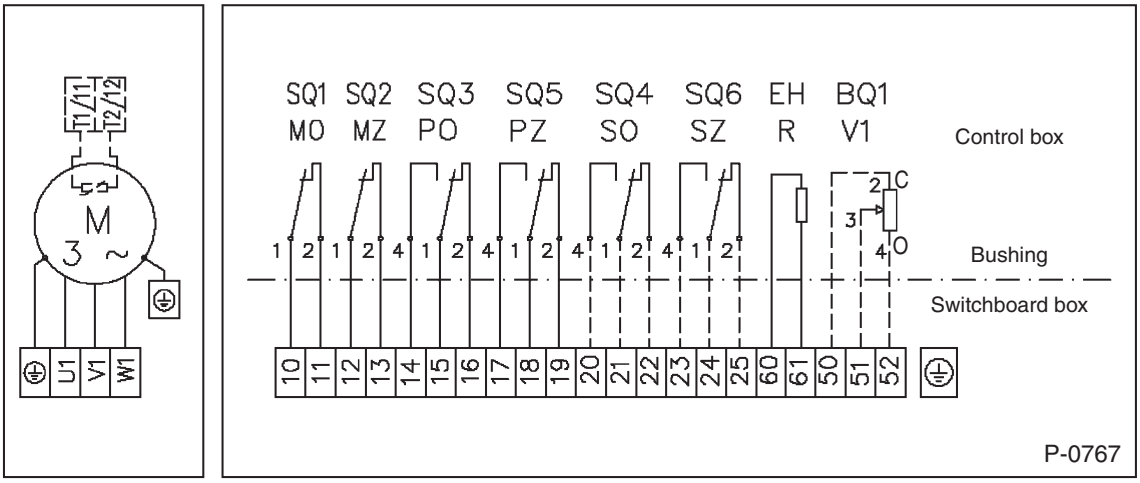

Electric motor
(it does not ensure spark safety)

Control and switchboard box *(spark safety is ensured provided that the elements are connected to spark-safe circuits only)*

Conditions of spark-safe protection

– Individual circuits of the actuator can be connected to independent spark-safe circuits provided that the above mentioned electric parameters are abided.
– No other than spark-safe circuits may be connected to the terminals.
– Connected conductors must be insulated to the metal part of the terminal so that spark-safe surface and air distances would be observed.

Under these conditions, the actuator provides for level of protection of spark safety “ib” as a simple device according to ČSN EN 60079-11.

Internal wiring diagram of **MODACT MO EEx** electric actuators
– design with potentiometer 1 x 100 Ω,
– design with four-pole change-over switch “local - remote”

P-0909

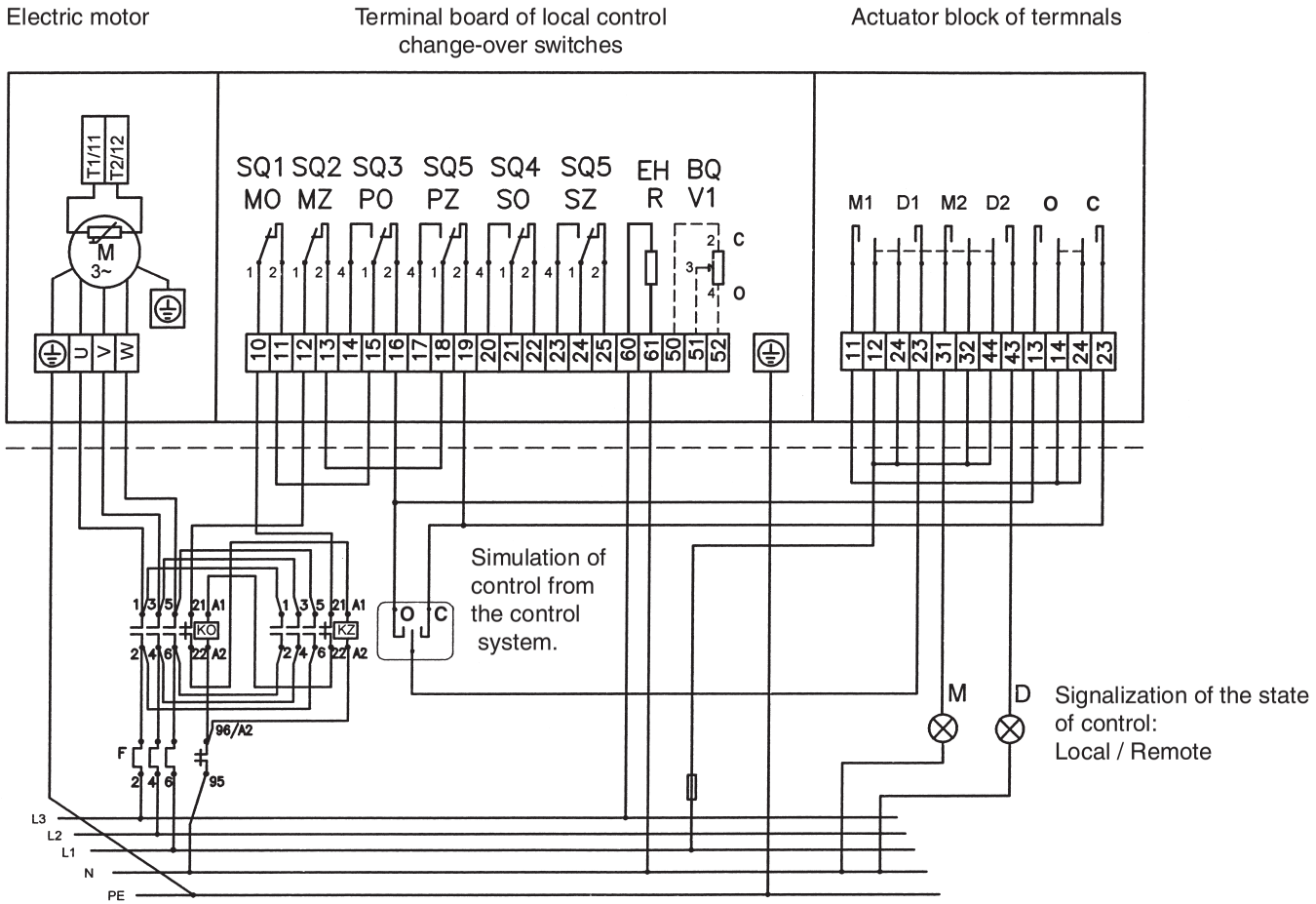

(Example of actuator wiring)

Internal wiring diagram of **MODACT MO EEx** electric actuators
– design with potentiometer 1 x 100 Ω,
– design with two-pole change-over switch “local - remote”

P-0910

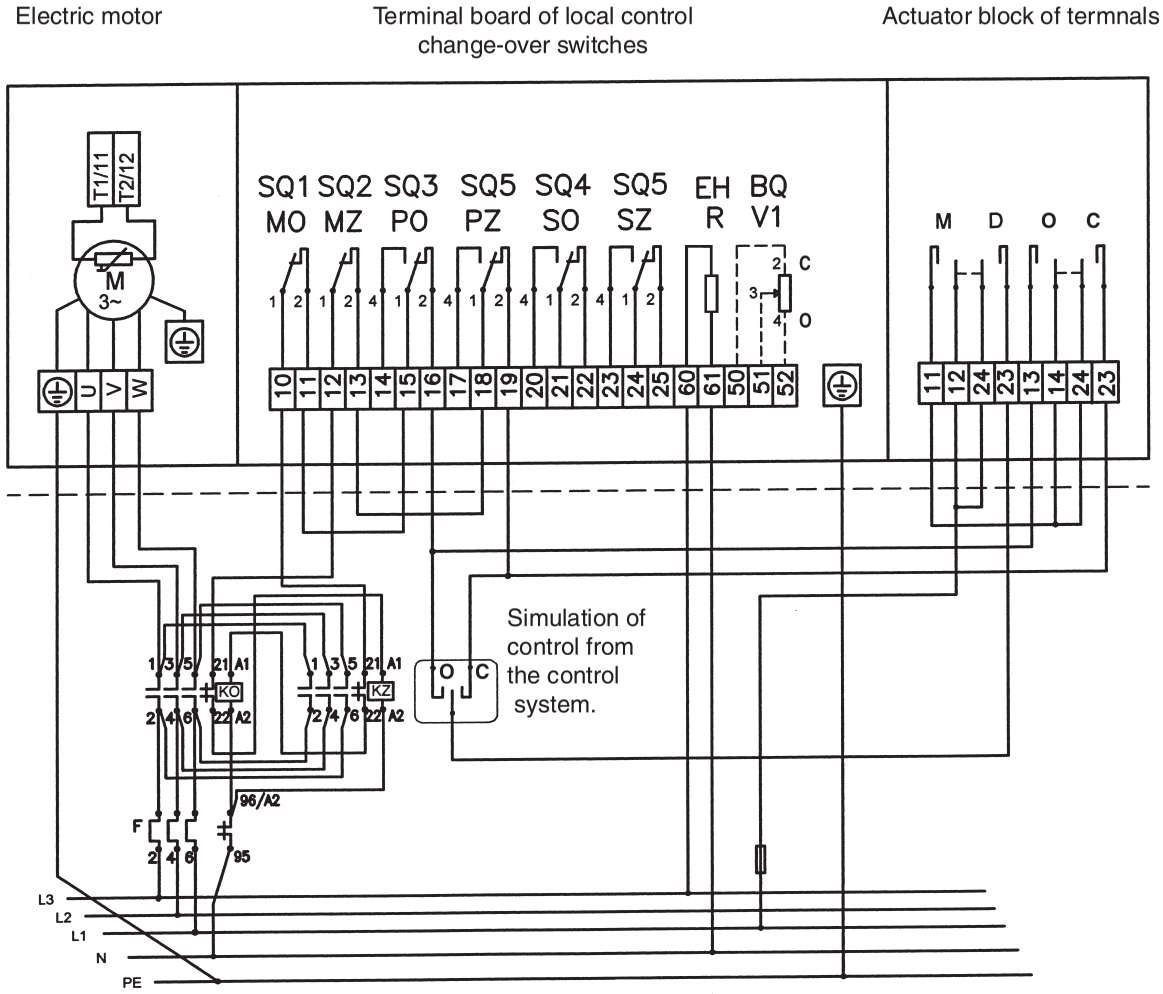

(Example of actuator wiring)

Internal wiring diagram of **MODACT MO EEx** electric actuators
– design with current position transmitter
– design with four-pole change-over switch “local - remote”

P-0911

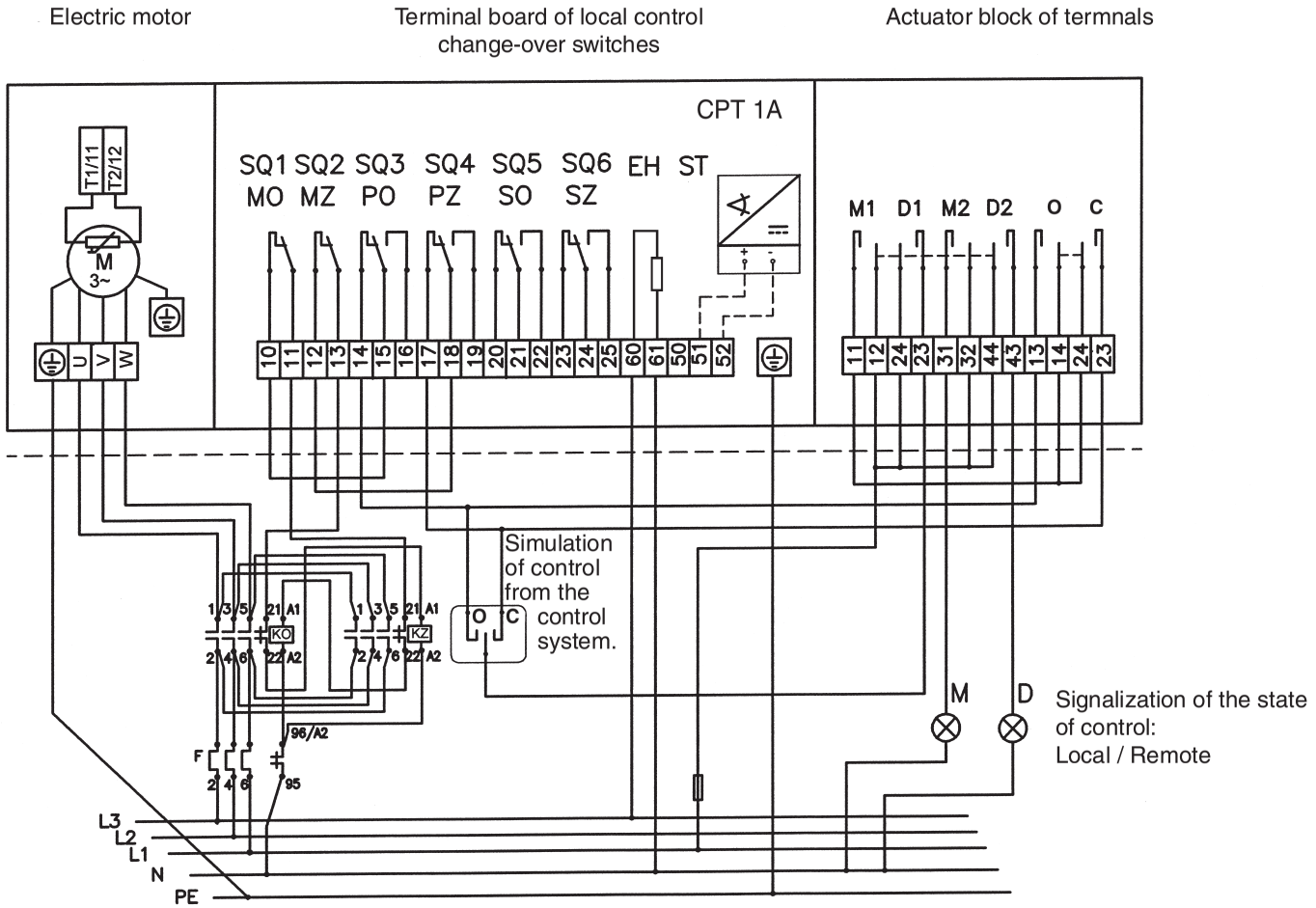

(Example of actuator wiring)

Internal wiring diagram of **MODACT MO EEx** electric actuators
– design with current position transmitter
– design with two-pole change-over switch “local - remote”

P-0912

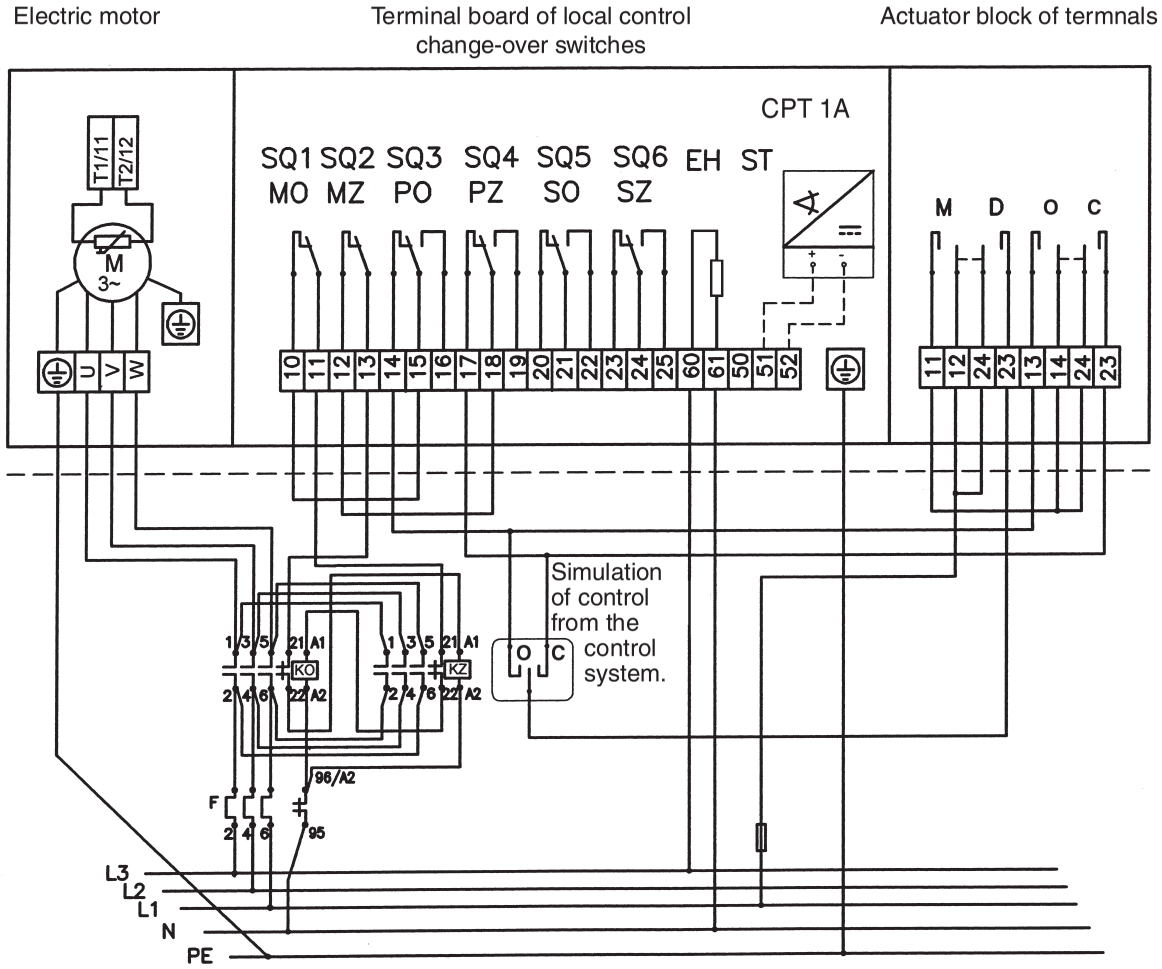

(Example of actuator wiring)

LIST OF SPARE PARTS

(for five year operation)

Type no.	Name	Drawing or standard no.	pcs	Application
1	2	3	4	5
52 120	Sealing ring 125x3 2327311049	PN 029281.2	2	Packing between power gear box and flange with gears
	Sealing ring 170x3 2327311054	PN 029281.2	1	Packing of terminal box cover
	Sealing ring 130x3 2327311041	PN 029281.2	2	Packing between control box, between flange and power gear box
	Sealing ring 43x35 2327311008	PN 029280.2	1	Packing of output shaft in control box
	Sealing ring 10x6 2327311001	PN 029280.2	2	Packing of torque-limit switching shaft
	Sealing ring 180x3 2327311043	PN 029281.2	1	Packing of terminal box cover
	"Gufero" ring 40x52x7 2327352066	ČSN 029401.0	1	Packing of output shaft in control box
	Sealing ring 16x12 2327311025	PN 029280.2	1	Packing of handwheel shaft
	Packing	224612280	1	Hole cover gasket for rising spindle of valve
	Micro-switch SAIA XGK 12-88-J21 2337441060	available from ZPA Pečky a.s.	1	Open and Close torque-limit switches
	Micro-switch D 433-B8LD 2337441098	available from ZPA Pečky a.s.	1	Open and Close position-limit switches Open and Close signalling switches
	"Gufero" ring 40x52x7 2327352066	ČSN 029401.0	2	Packing of output shaft in power gear box
	"Gufero" ring 16x28x7 2327352022	ČSN 029401.0	1	Packing of handwheel shaft
	Packing 16x22	224580840	2	Packing of threaded plug *(for oil filling)*
	Packing	224635220	1	Packing between control and terminal boxes
52 121 + 52 122	Micro-switch SAIA XGK 12-88-J21 2337441060	available from ZPA Pečky a.s.	1	Open and Close torque-limit switches
	"Gufero" ring 60x75x8 2327352090	ČSN 029401.0	2	Packing of output shaft in power gear box
	"Gufero" ring 20x32x7 2327352027	ČSN 029401.0	1	Packing of handwheel shaft
	Sealing ring 95x85 2327311029	PN 029280.2	1	Packing of insertion with "Gufero" rings in power gear box
	Sealing ring 50x2 2327311028	PN 029281.2	1	Packing of cover of torque-limit switching spring
	Sealing ring 16x22	224580840	2	Packing of threaded plug *(for oil filling)*

1	2	3	4	5
	Packing	224642240	1	Packing between electric motor and flange with gears
	Micro-switch D 433-B8LD 2337441098	available from ZPA Pečky a.s.	1	Open and Close position-limit switches Open and Close signalling switches
	Sealing ring 160x3 2327311048	PN 029281.2	1	Packing between power gear box and flange with gears
	Sealing ring 170x3 2327311054	PN 029281.2	1	Packing of terminal box cover
	Sealing ring 190x3 2327311056	PN 029281.2	1	Packing between control box and power gear box
	“Gufero” ring 55x70x8 2327352083	ČSN 029401.0	1	Packing of output shaft in control box
	Sealing ring 10x6 2327311001	PN 029280.2	2	Packing of torque-limit switching shaft
	Sealing ring 200x3 2327311044	PN 029281.2	2	Packing of terminal box cover
	Packing, size 3	224610741	1	Hole cover gasket for rising spindle of valve
	Sealing ring 60x50 2327311090	PN 029280.2	1	Packing of output shaft in control box
52 123 + 52 124	Sealing ring 220x3 2327311045	PN 029281.2	1	Packing of control box cover
	“Gufero” ring 80x100x10 2327352096	ČSN 029401.0	1	Packing of output shaft in control box
	Sealing ring 10x6 2327311001	PN 029280.2	2	Packing of torque-limit switching shaft
	Sealing ring 85x75 2327311087	PN 029280.2	1	Packing of output shaft in control box cover
	Sealing ring 25x21 2327310999	PN 029280.2	1	Packing of handwheel shaft
	Packing	224637080	1	Hole cover gasket for rising spindle of valve
	Micro-switch SAIA XGK 12-88-J21 2337441060	available from ZPA Pečky a.s.	1	Open and Close torque-limit switches
	“Gufero” ring 80x100x10 2327352096	ČSN 029401.0	1	Packing of output shaft in power gear box
	“Gufero” ring 27x40x10 2327352044	ČSN 029401.0	1	Packing of handwheel shaft
	Sealing ring 70x2 2327311058	PN 029281.2	1	Packing of cover of torque-limit switching spring
	Sealing ring 200x3 2327311044	PN 029281.2	1	Packing between power gear box and flange with gears
	Packing 16x22	224580840	2	Packing of threaded plug *(for oil filling)*
	Packing	224635220	1	Packing between control and terminal boxes

1	2	3	4	5
	Micro-switch D 433-B8LD 2337441098	available from ZPA Pečky a.s.	1	Open and Close position-limit switches Open and Close signalling switches
	Packing	224591530	1	Packing between electric motor and flange with gears
	Sealing ring 200x3 2327311044	PN 029281.2	1	Packing between power gear box and control box
	Sealing ring 170x3 2327311054	PN 029281.2	1	Packing of terminal box cover
52 125	Micro-switch SAIA XGK 12-88-J21 2337441060	available from ZPA Pečky a.s.	1	Open and Close torque-limit switches
	Micro-switch D 433-B8LD 2337441098	available from ZPA Pečky a.s.	1	Open and Close position-limit switches Open and Close signalling switches
	Sealing ring 16x22	224580840	2	Packing of threaded plug *(for oil filling)*
	Packing	22459337	1	Packing between electric motor and flange with gears
	Sealing ring 280x3 2327311078	PN 029281.2	1	Packing between power gear box and flange with gears
	“Gufero” ring 105x130x13 2327352109	ČSN 029401.0	2	Packing of output shaft in power gear box
	“Gufero” ring 30x50x12 2327352054	ČSN 029401.0	1	Packing of handwheel shaft
	Sealing ring 30x22 2327311026	PN 029280.2	1	Packing of handwheel shaft
	Sealing ring 90x2 2327311081	PN 029281.2	1	Packing of torque-limit switching spring cover
	“Gufero” ring 85x110x12 2327352099	ČSN 029401.0	1	Packing of output shaft in control box
	Sealing ring 260x5 2327311046	PN 029281.2	1	Packing between power gear box and control box
	Sealing ring 220x3 2327311045	PN 029281.2	1	Packing of control box cover
	Sealing ring 10x6 2327311001	PN 029280.2	2	Packing of torque tripping shaft
	Sealing ring 90x80 2327311011	PN 029280.2	1	Packing of output shaft in control box cover
	Packing	224637080	1	Hole cover gasket for rising spindle of valve
	Packing	224635220	1	Packing between control and terminal boxes
	Sealing ring 170x3 2327311054	PN 029281.2	1	Packing of terminal box cover
Position transmitters				
52 120	Potentiometer 1 x 100 Ω 99557-3	214628653	1	To be mounted on control board
52 121-5	Potentiometer 1 x 100 Ω 99557-3	2340510282	1	To be mounted on control board
52 120-5	Current position transmitter CPT 1A	2340510393	1	To be mounted on control board

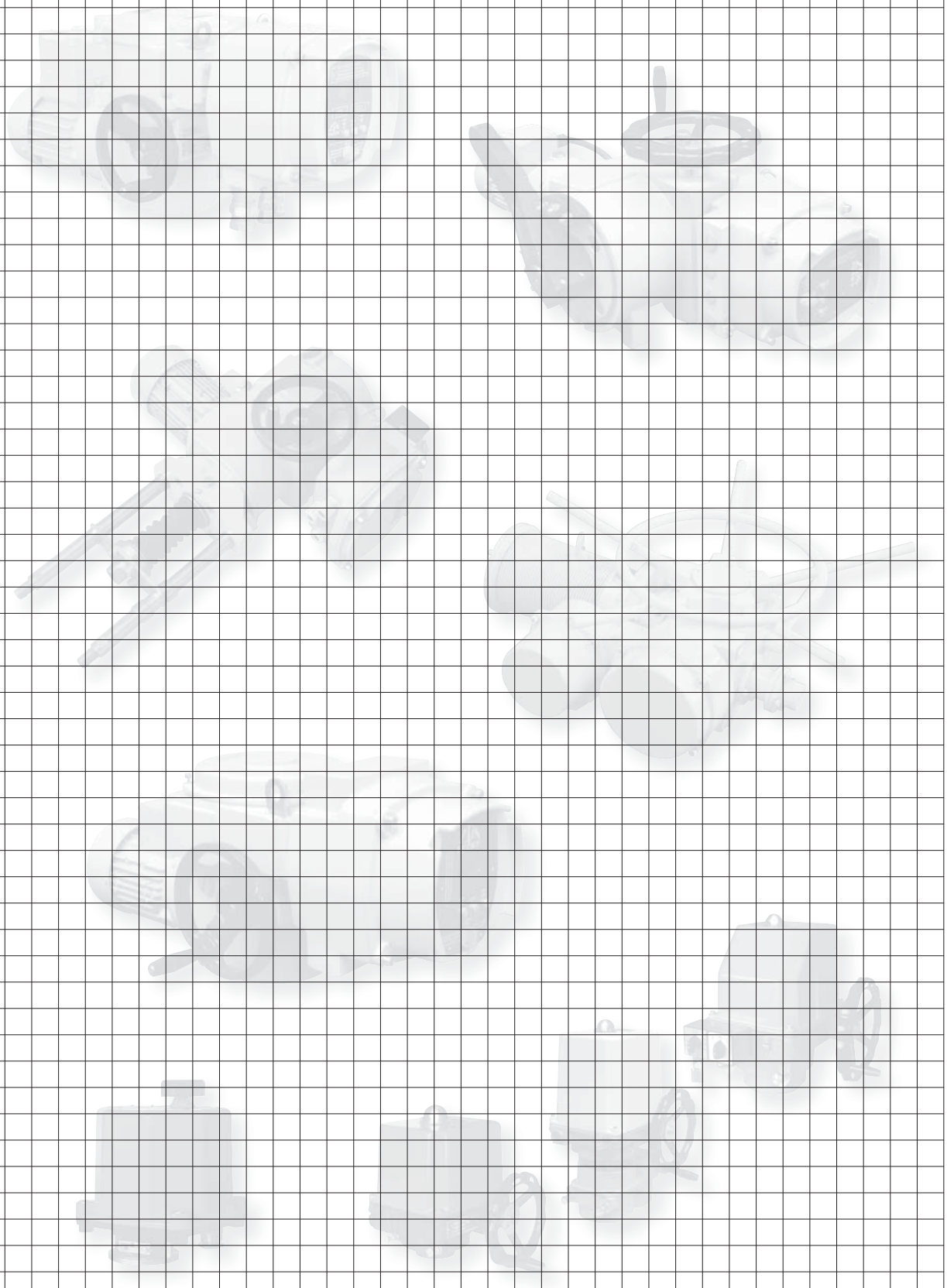

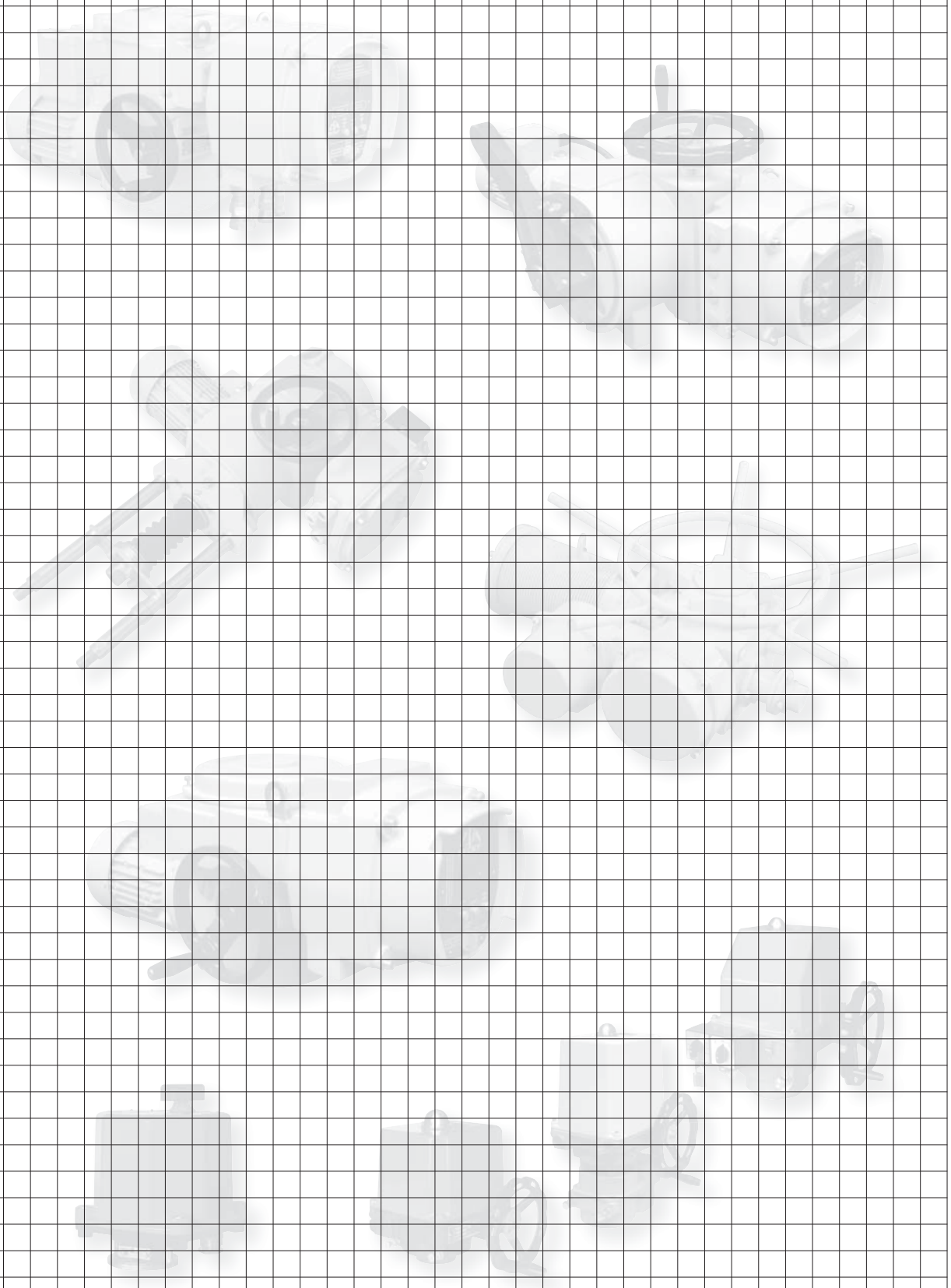

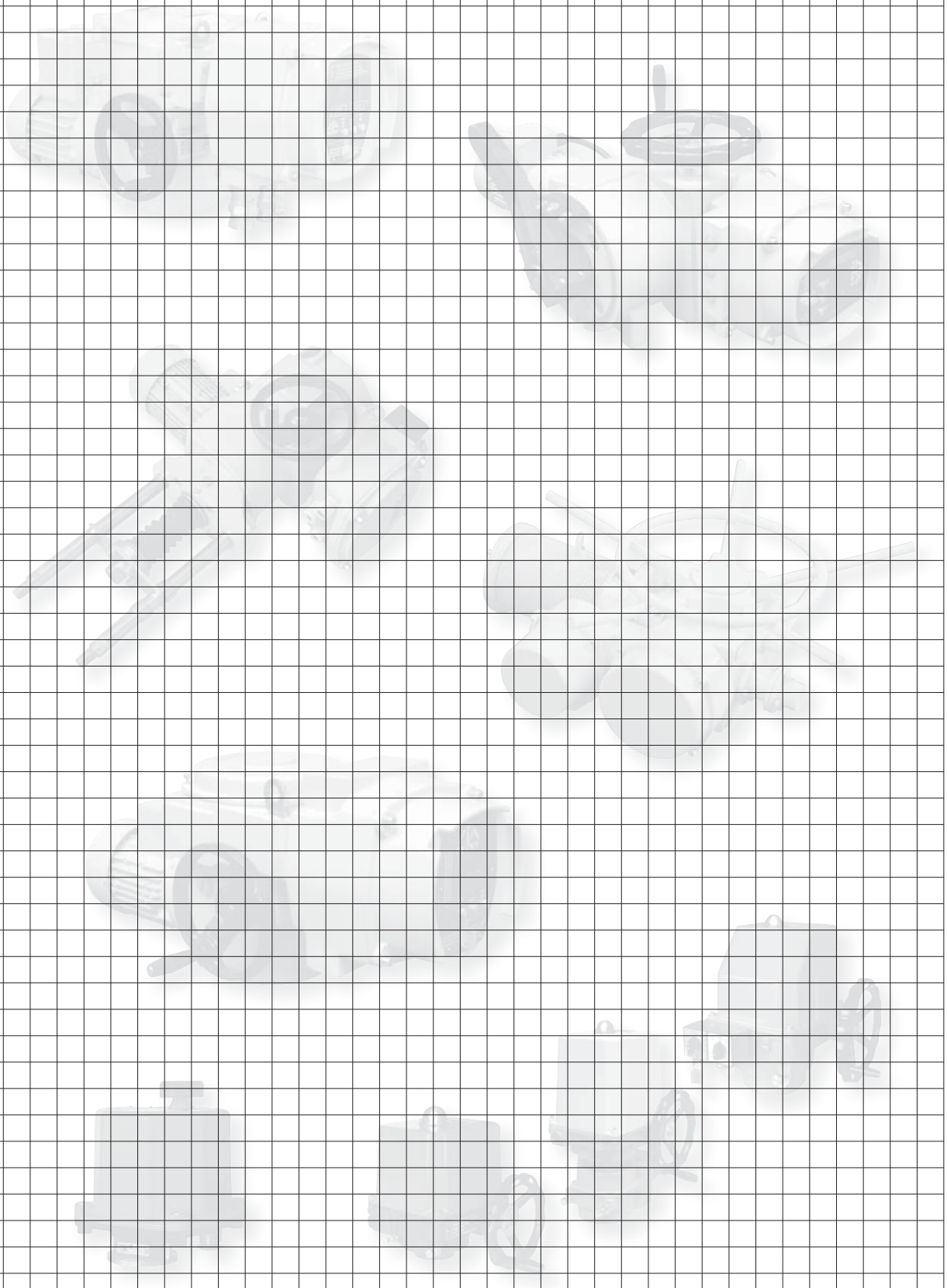

ZPA PEČKY, a.s.

Development, production and services of electric actuators and switchboards.
Top-quality sheet-metal processing (TRUMPF equipment), powder paint shop.

SURVEY OF PRODUCED ACTUATORS

KP MINI, KP MIDI
Electric rotary (90°) actuators (up to 30 Nm)

MODACT MOK, MOKED, MOKP Ex, MOKPED Ex
Electric rotary (90°) actuators for ball valves and flaps

MODACT MOKA
Electric rotary (90°) actuators for nuclear power stations
application outside containment

MODACT MON, MOP, MONJ, MONED, MOPED, MONEDJ
Electric rotary multi-turn actuators

MODACT MO EEx, MOED EEx
Explosion proof electric multi-turn actuators

MODACT MOA
Electric multi-turn actuators for nuclear power stations
application outside containment

MODACT MOA OC
Electric multi-turn actuators for nuclear power stations
application inside containment

MODACT MPR Variant
Electric rotary (160°) lever actuators with a variable output speed

MODACT MPS, MPSP, MPSED, MPSPED
Electric rotary (160°) lever actuators with a constant output speed

MODACT MTN, MTP, MTNED, MTPED
Electric linear thrust actuators with a constant output speed

Deliveries of assembled actuator + valve (or MASTERGEAR gearbox) combinations

TRADITION • QUALITY • RELIABILITY

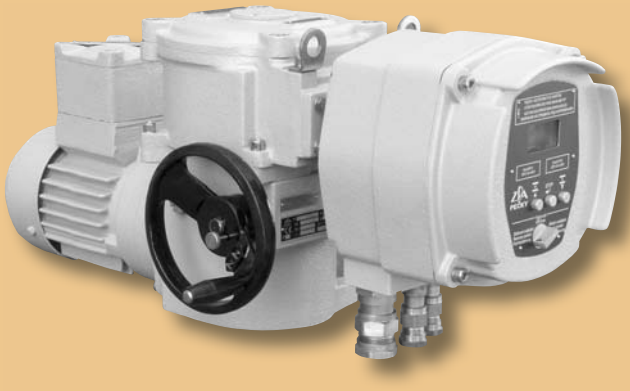

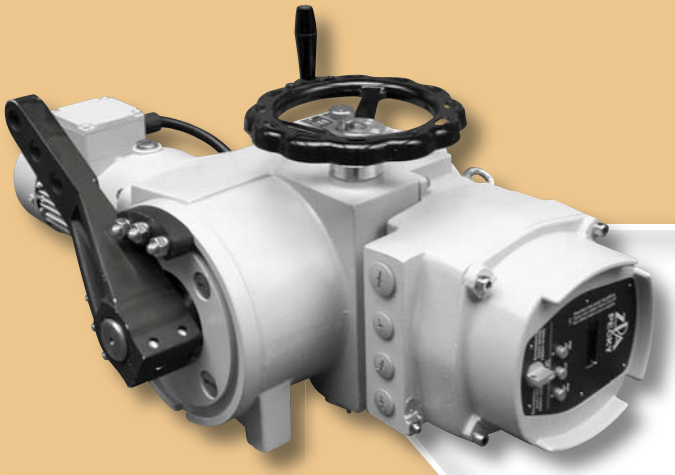

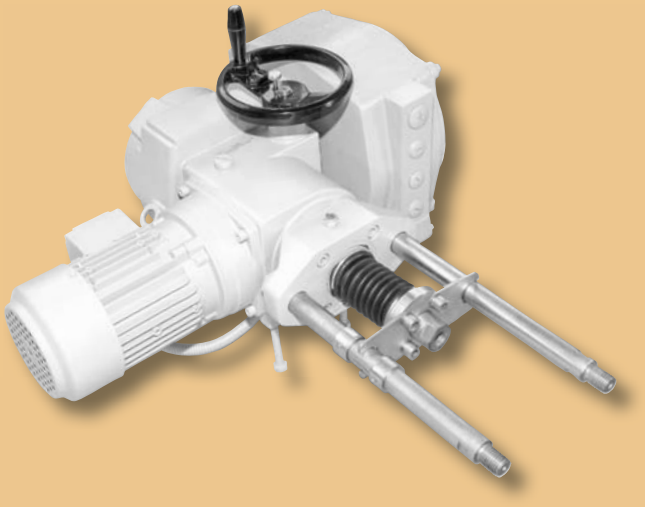

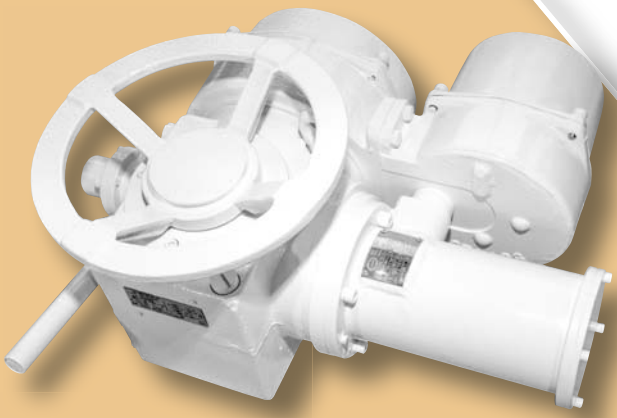

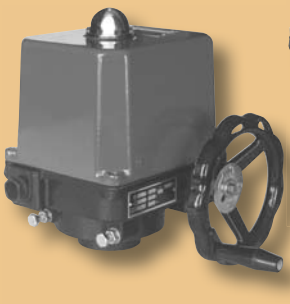

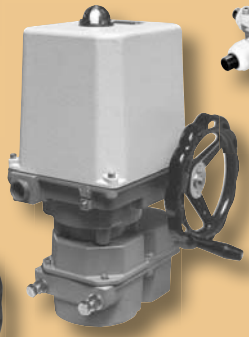

ZPA Pečky, a.s.
tř. 5. května 166
289 11 PEČKY, Czech Republic
www.zpa-pecky.cz

tel.: +420 321 785 141-9
fax: +420 321 785 165
+420 321 785 167
e-mail: zpa@zpa-pecky.cz